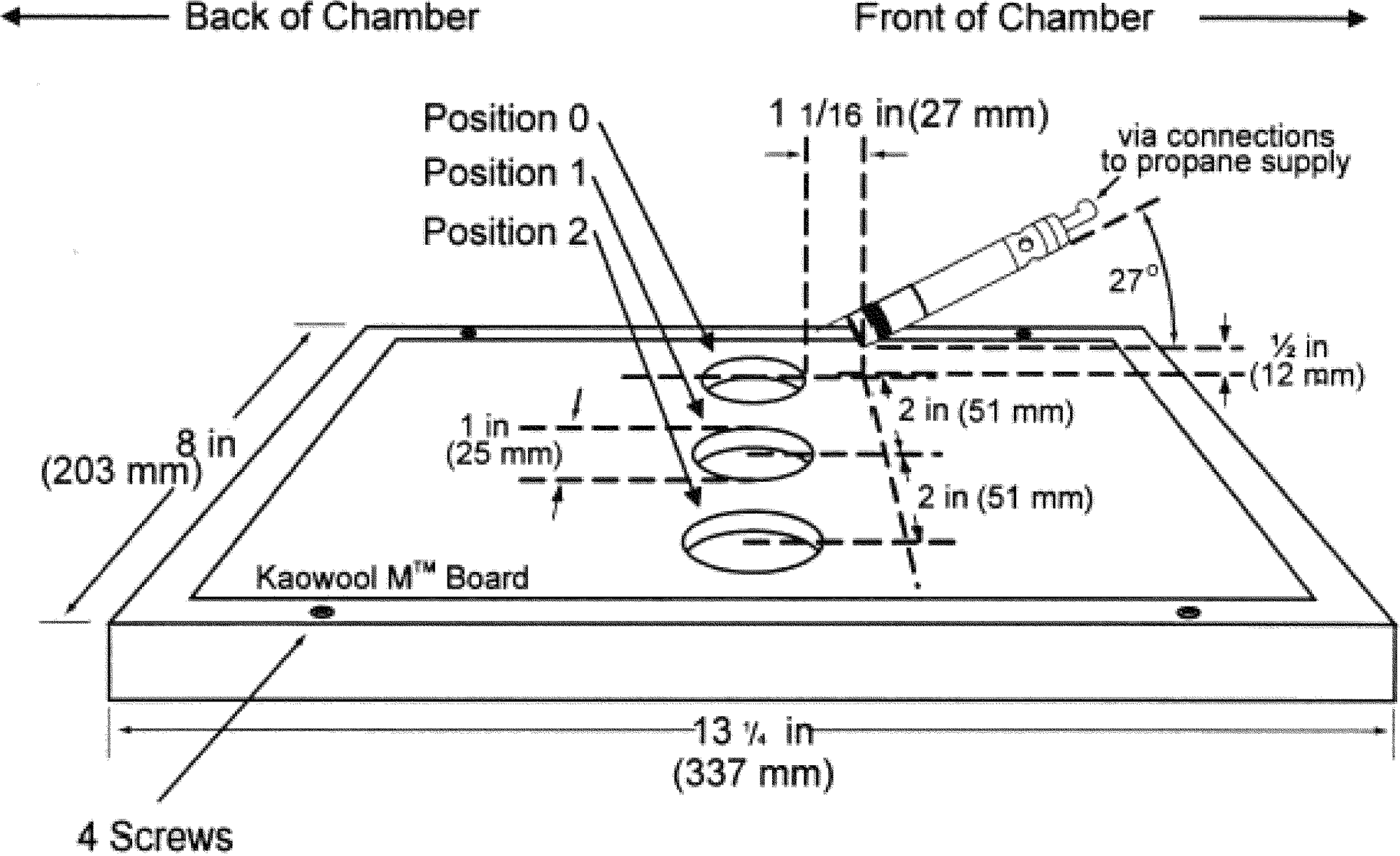

FIGURE F7—Calorimeter Holding Frame