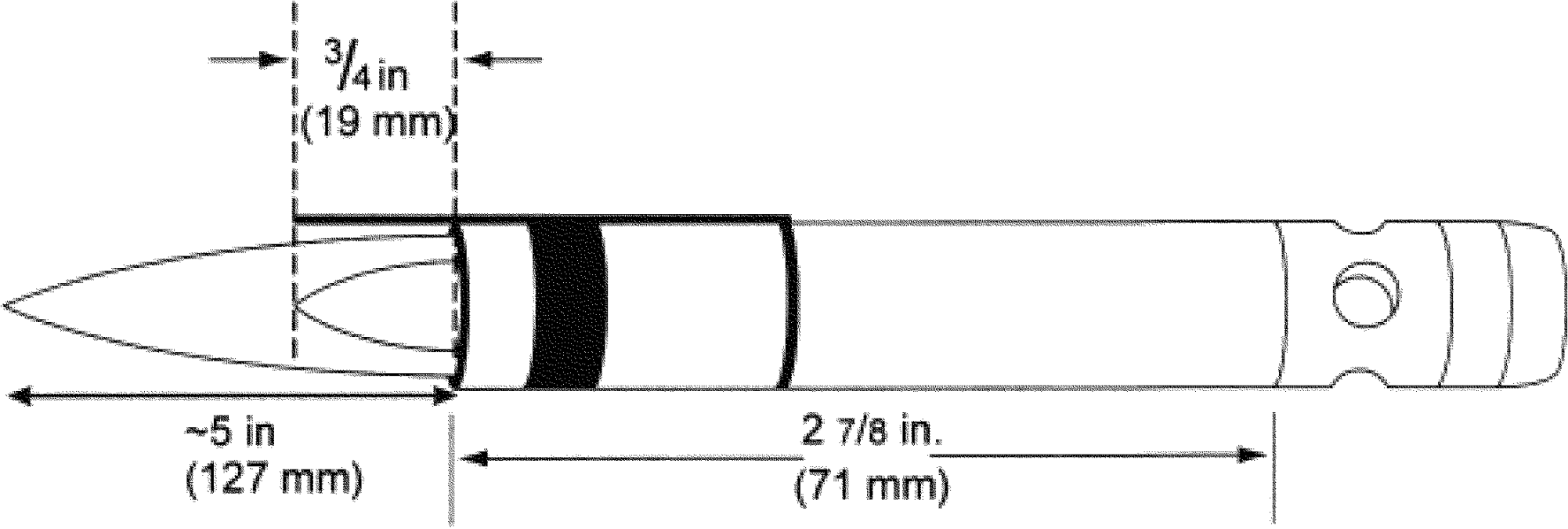

FIGURE F6—Propane Pilot Burner