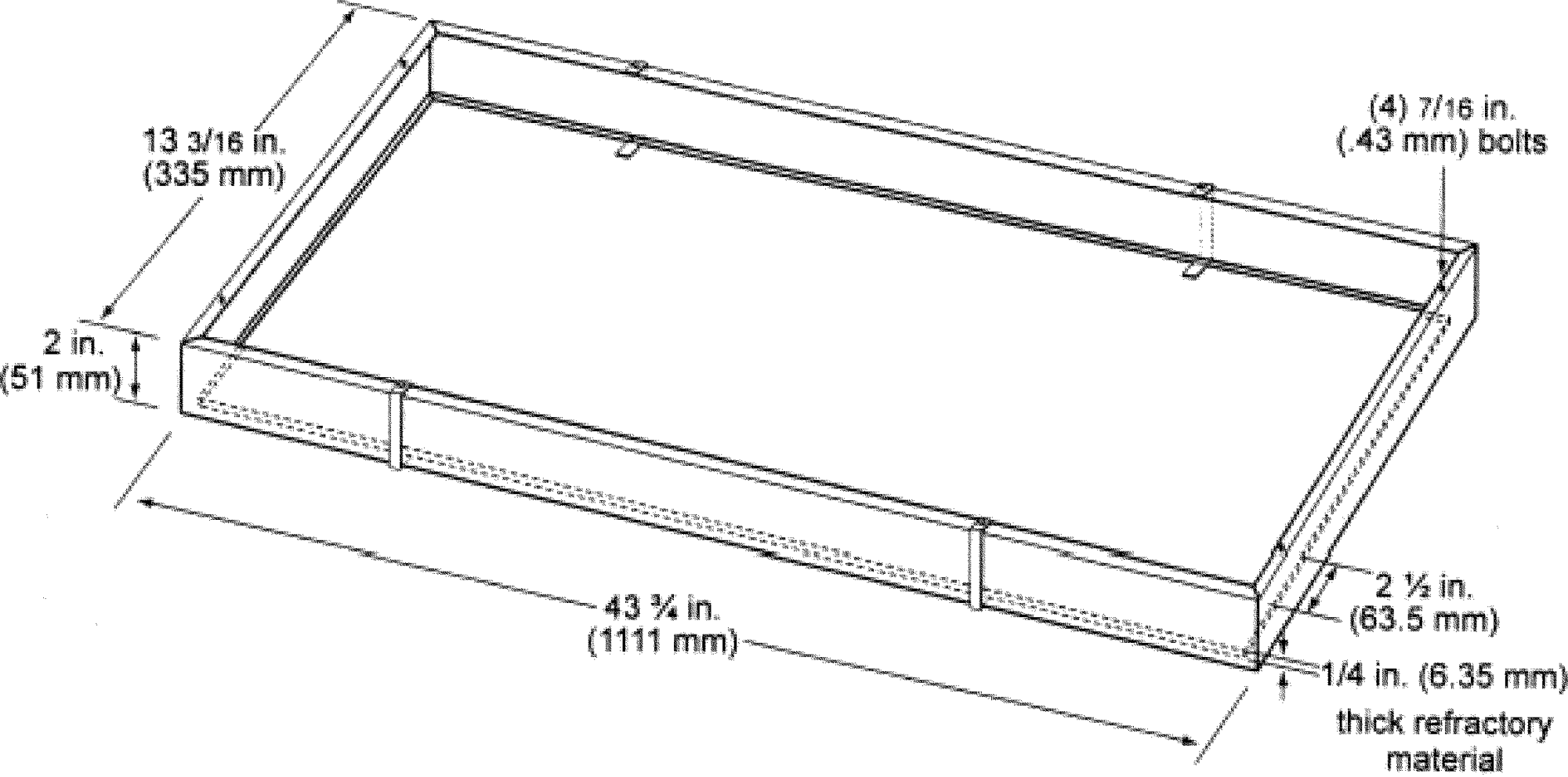

FIGURE F4—Sliding Platform