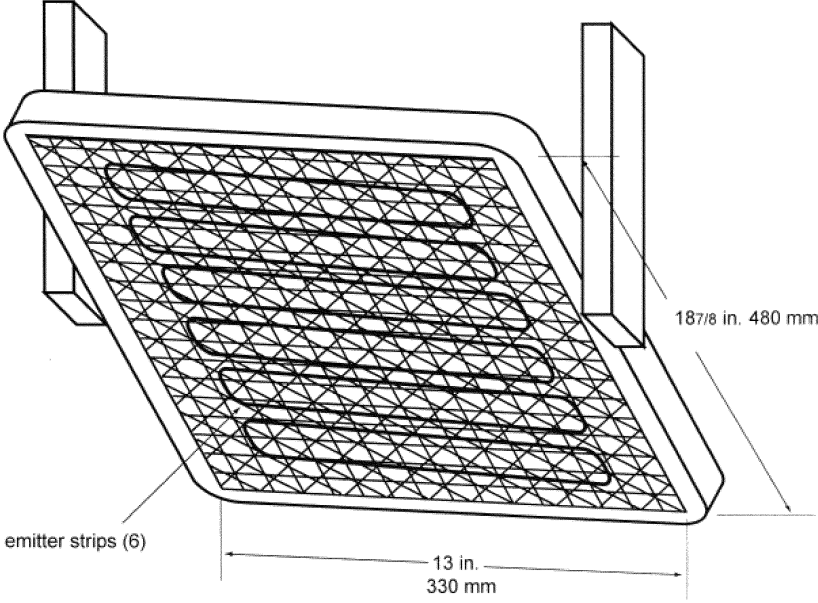

FIGURE F3a—Electric Panel

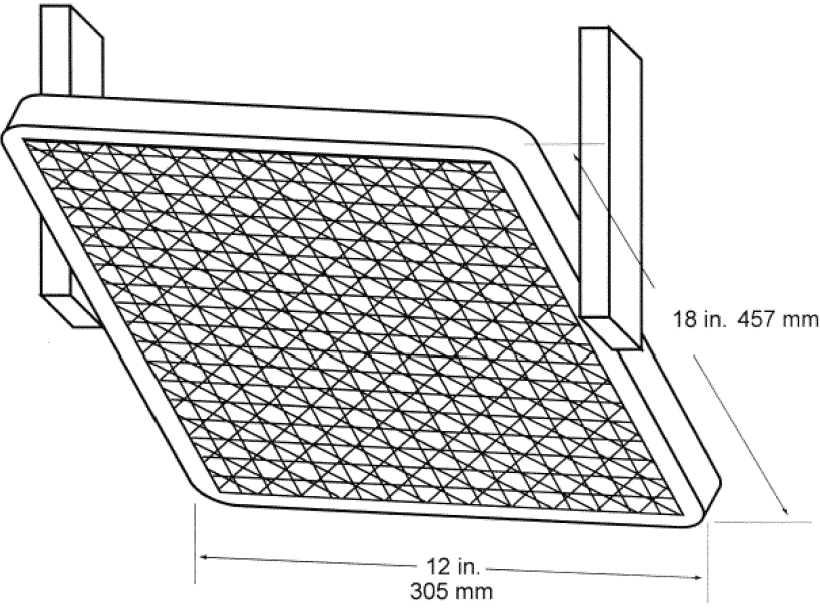

FIGURE F3b—Air Propane Radiant Panel