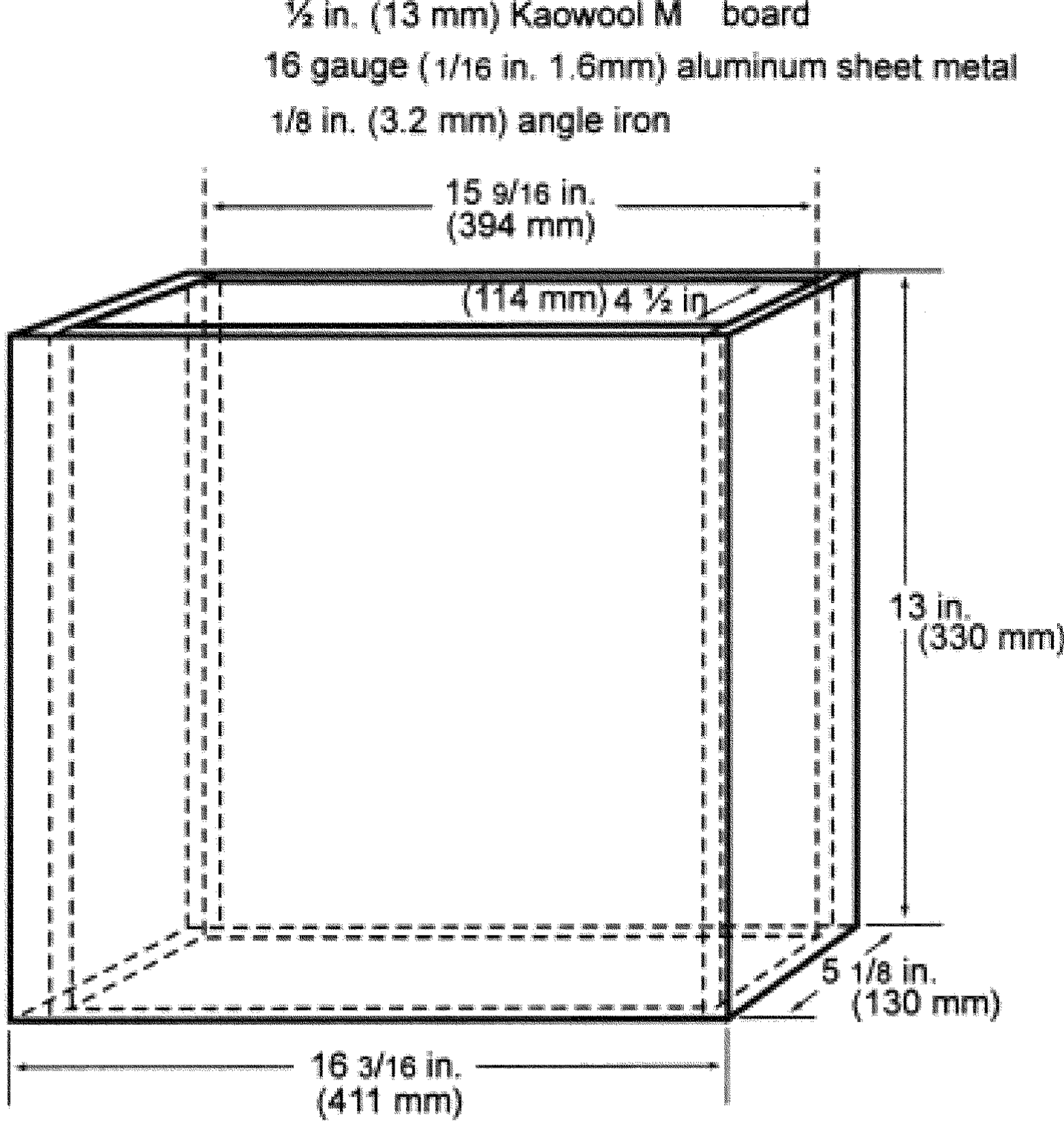

FIGURE F2—Internal Chimney