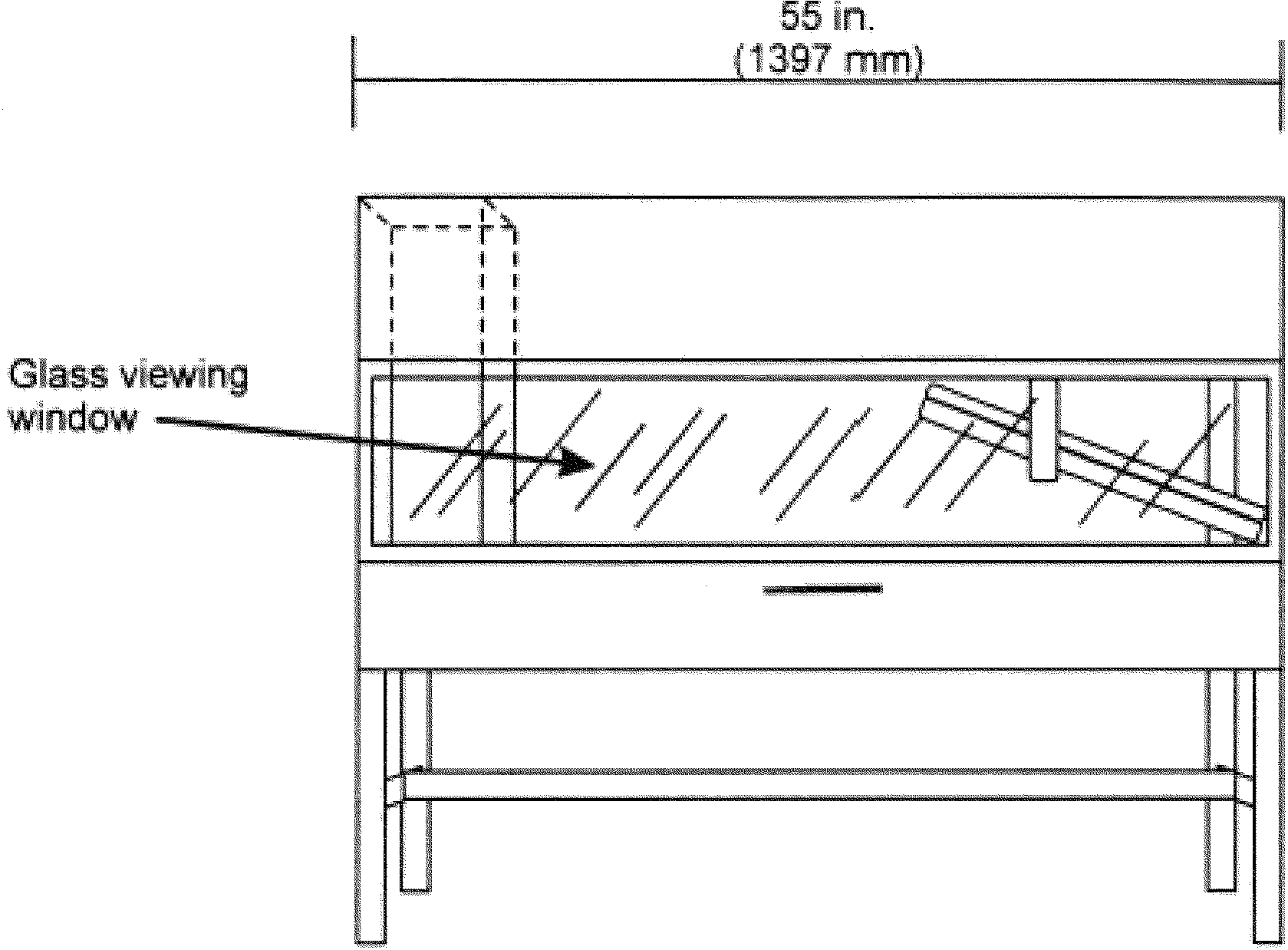

FIGURE F1—Radiant Panel Test Chamber