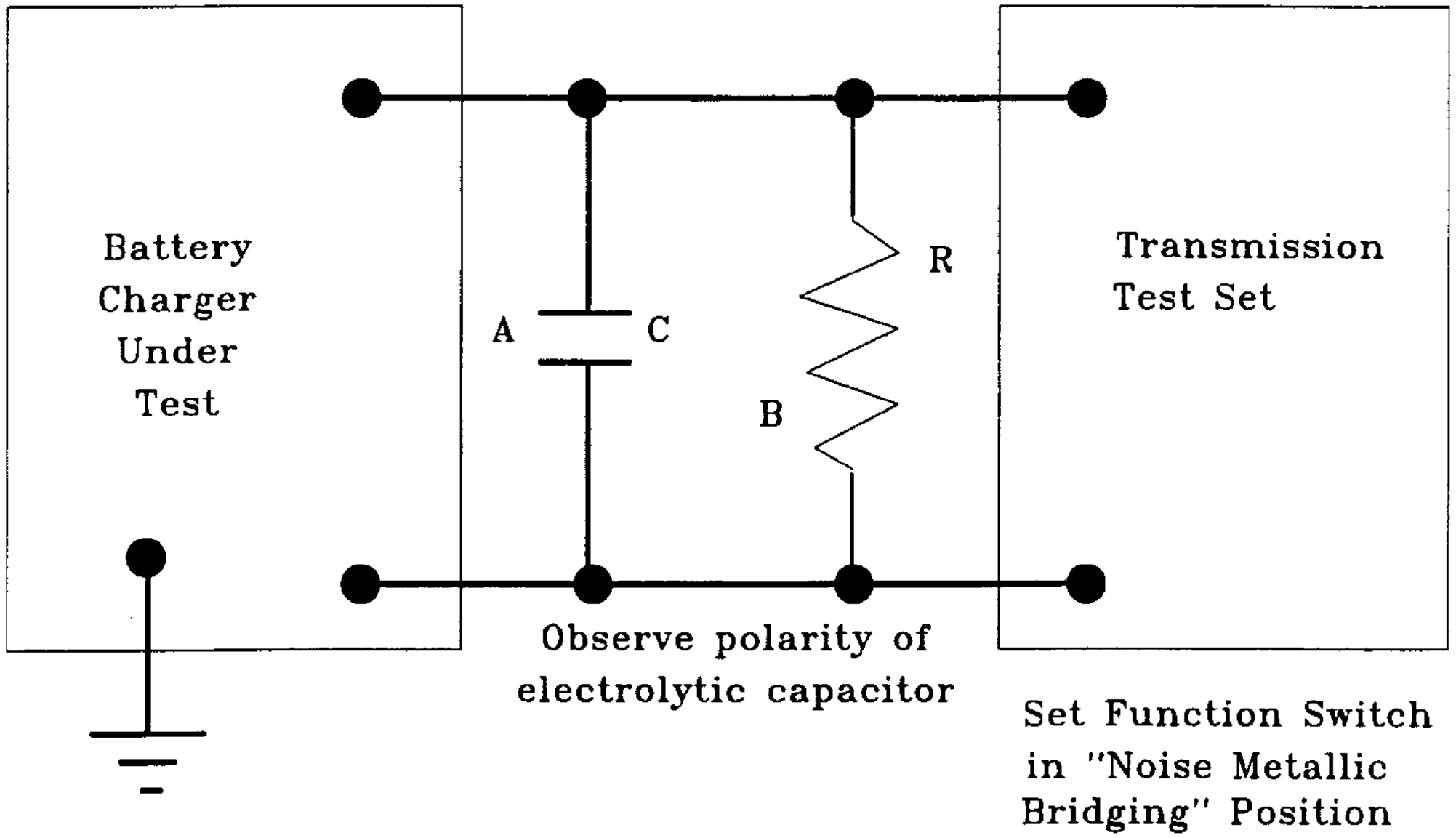
Battery
Charger
Under
Test
A
C
R
B
Transmission
Test Set
Observe polarity of
electrolytic capacitor
Set Function Switch
in "Noise Metallic
Bridging" Position