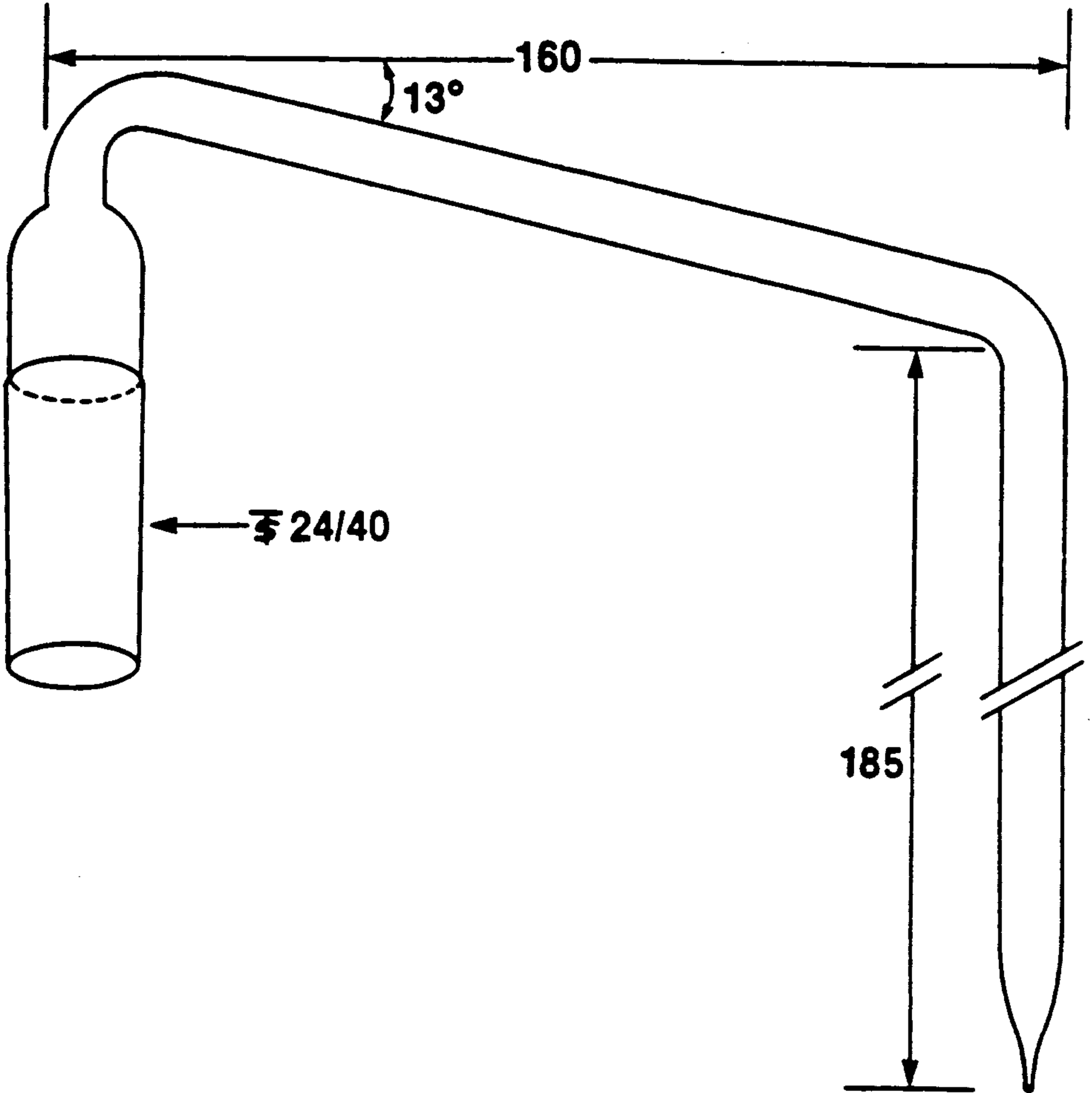
160
13°
24/40
185