FIGURE 7 - VEHICLE COORDINATE REFERENCE SYSTEM FOR INERTIAL TESTING

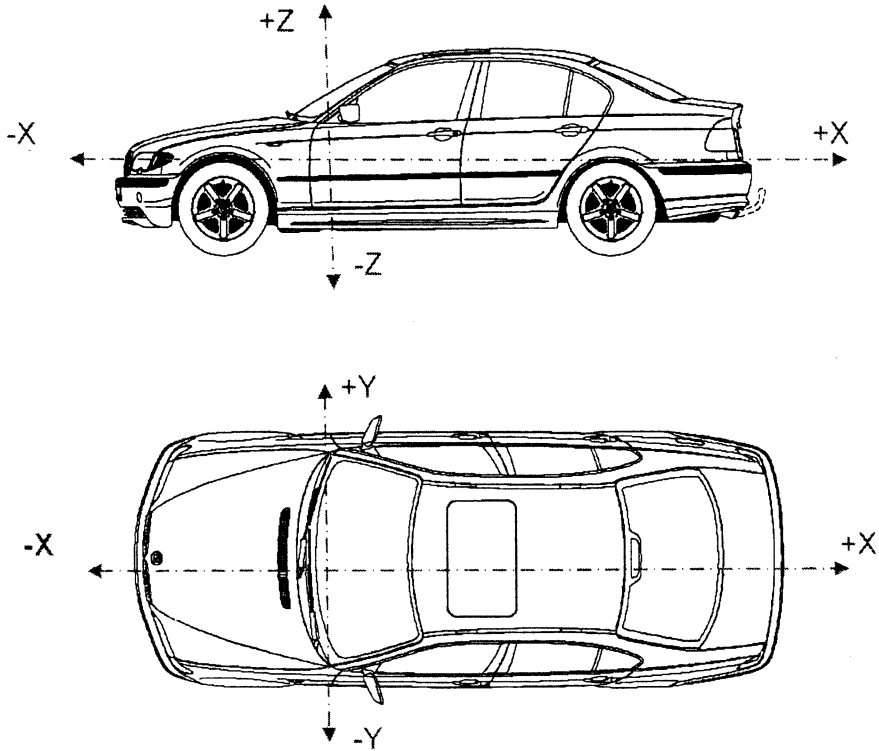

X = longitudinal direction
Y = transverse direction
Z = vertical direction