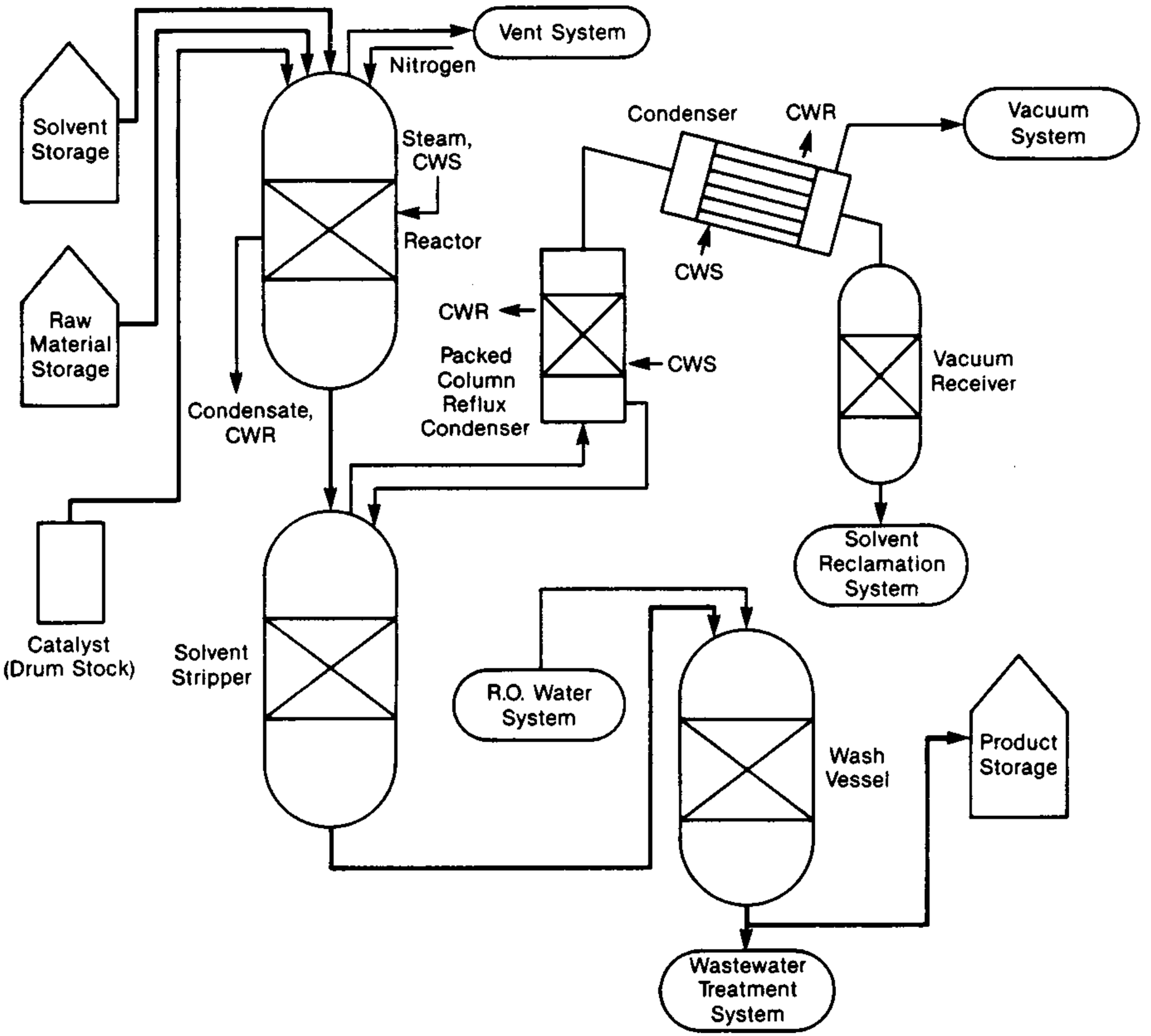Example of a Process Flow Diagram