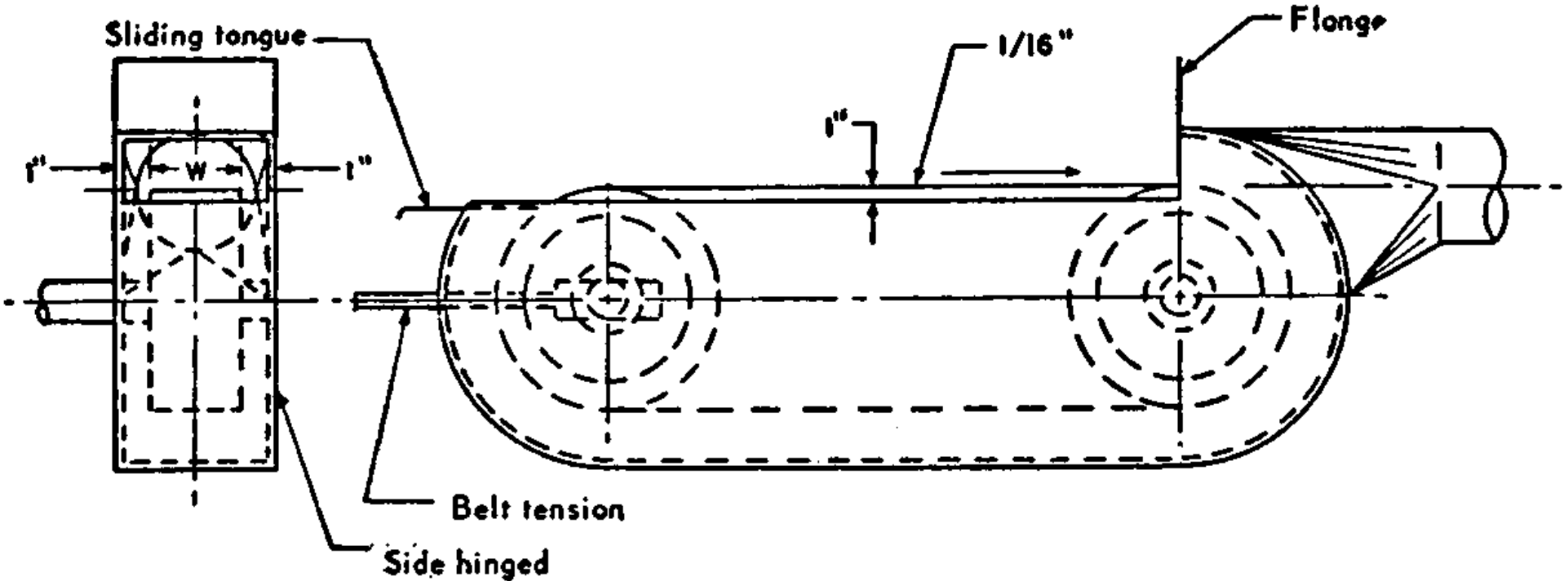
Sliding tongue
1/16"
Flange
1"
1"
W
1"
Belt tension
Side hinged