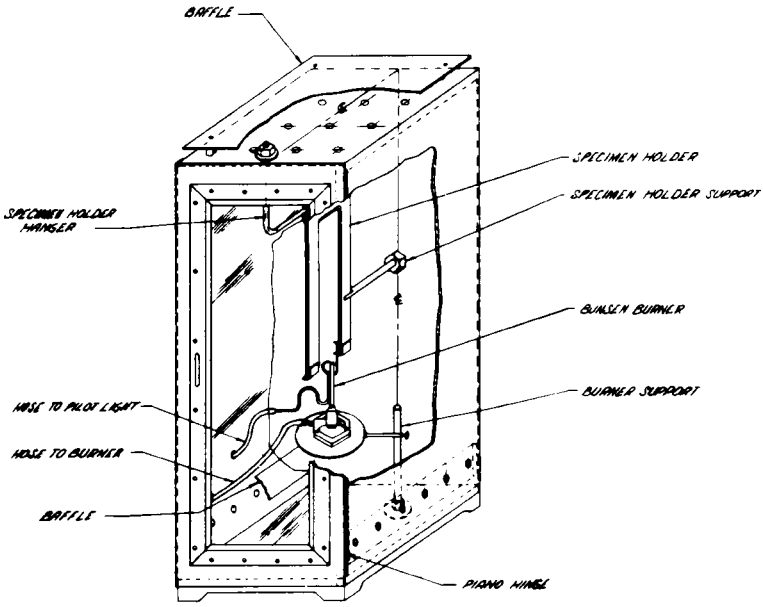

ILLUSTRATION

FIGURE L-1 - Vertical flame resistance textile apparatus. All given System International (S. I.) Unit: 1-inch = 2/54 cm. dimensions are in inches.