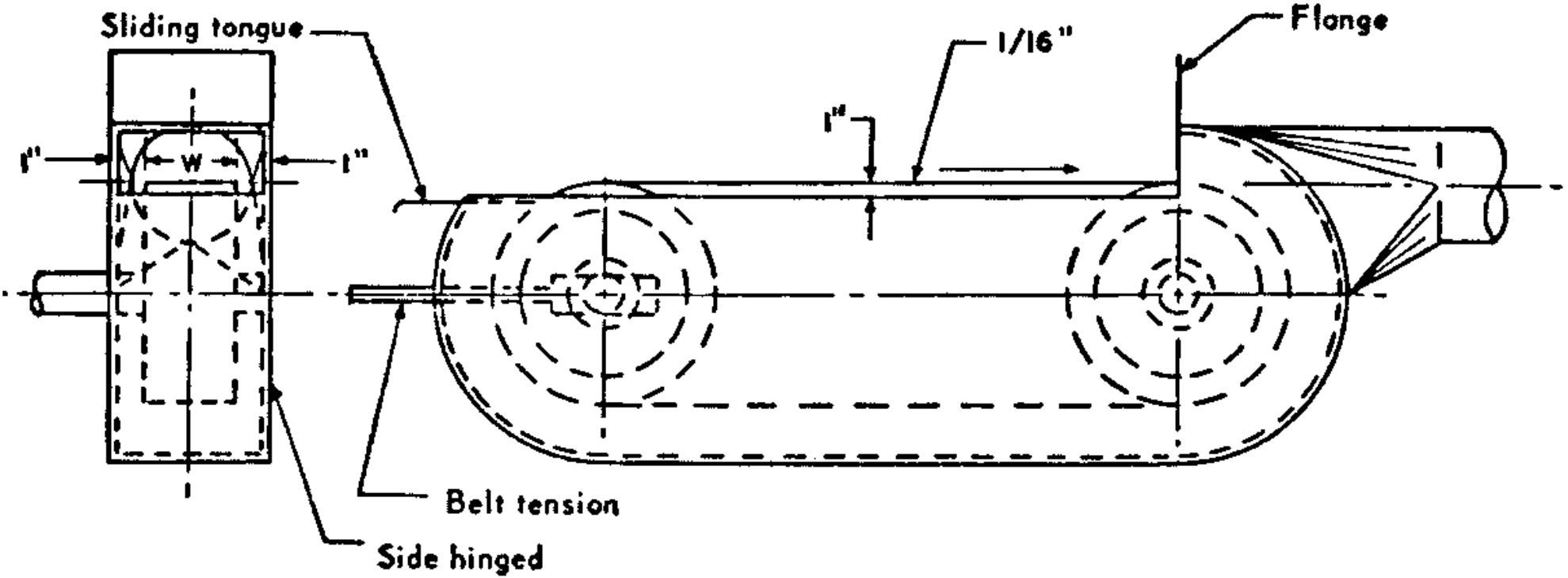

FIGURE G-8.—A Typical Hood for a Belt Operation