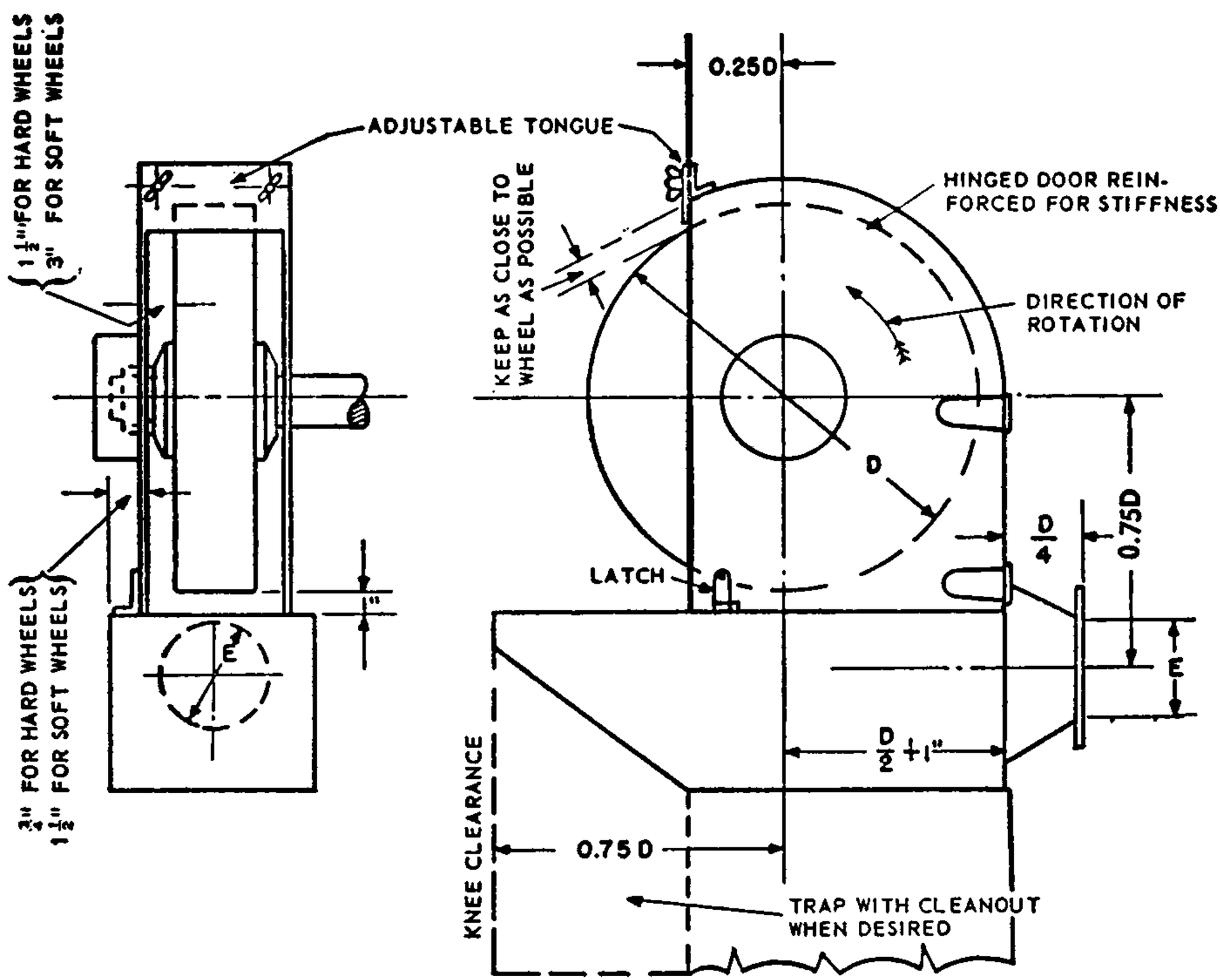
1 1/2" FOR HARD WHEELS
3" FOR SOFT WHEELS
ADJUSTABLE TONGUE
3/4" FOR HARD WHEELS
1 1/2" FOR SOFT WHEELS
1"
m
0.25D
KEEP AS CLOSE TO WHEEL AS POSSIBLE
HINGED DOOR REINFORCED FOR STIFFNESS
DIRECTION OF ROTATION
D
LATCH
D/4
0.75D
m
D/2 + 1"
KNEE CLEARANCE
0.75 D
TRAP WITH CLEANOUT WHEN DESIRED

Fig. G-4