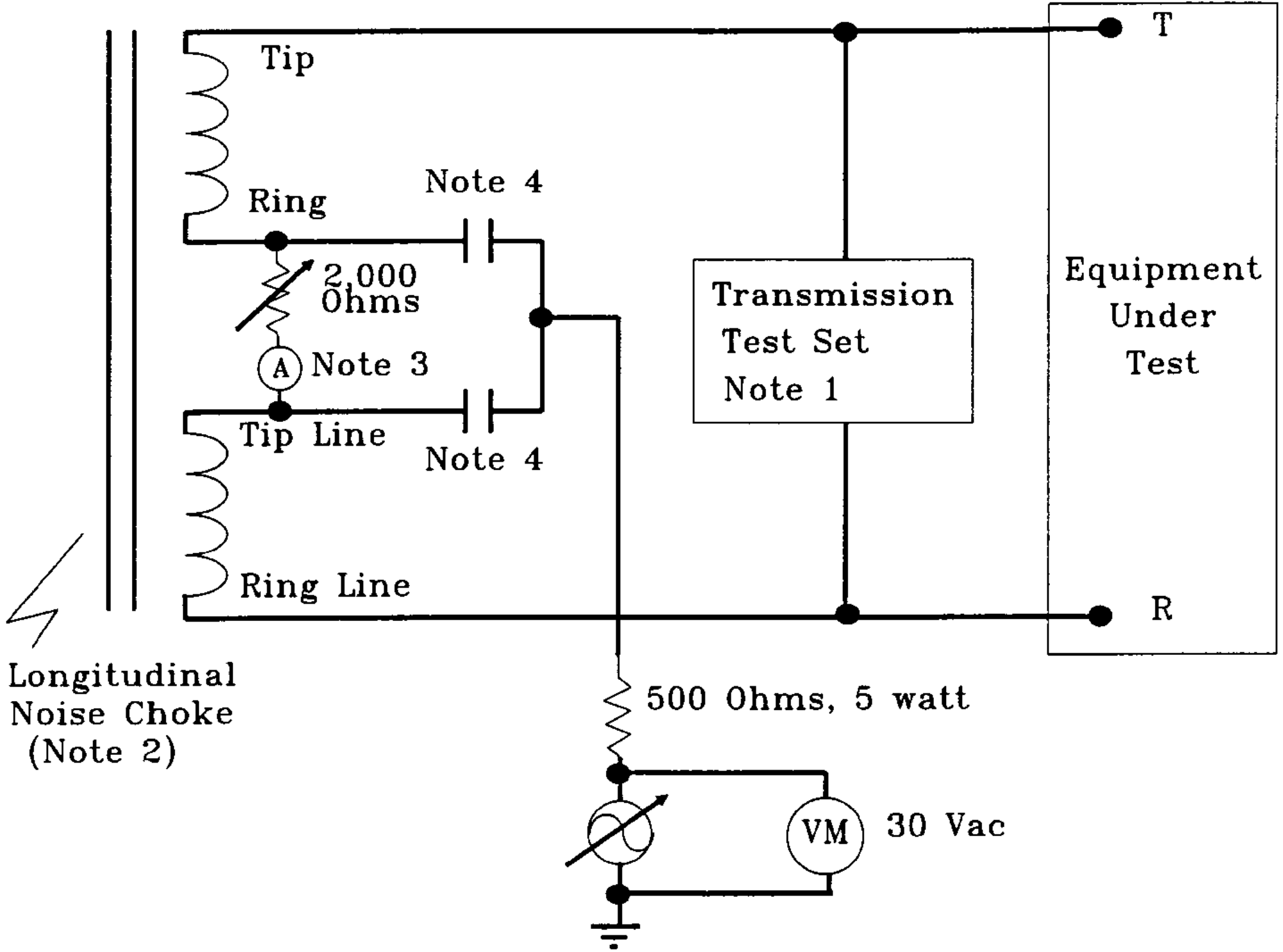
Tip
Ring
Note 4
2,000
Ohms
A
Note 3
Tip Line
Note 4
Ring Line
Transmission
Test Set
Note 1
Equipment
Under
Test
T
R
Longitudinal
Noise Choke
(Note 2)
500 Ohms, 5 watt
VM
30 Vac