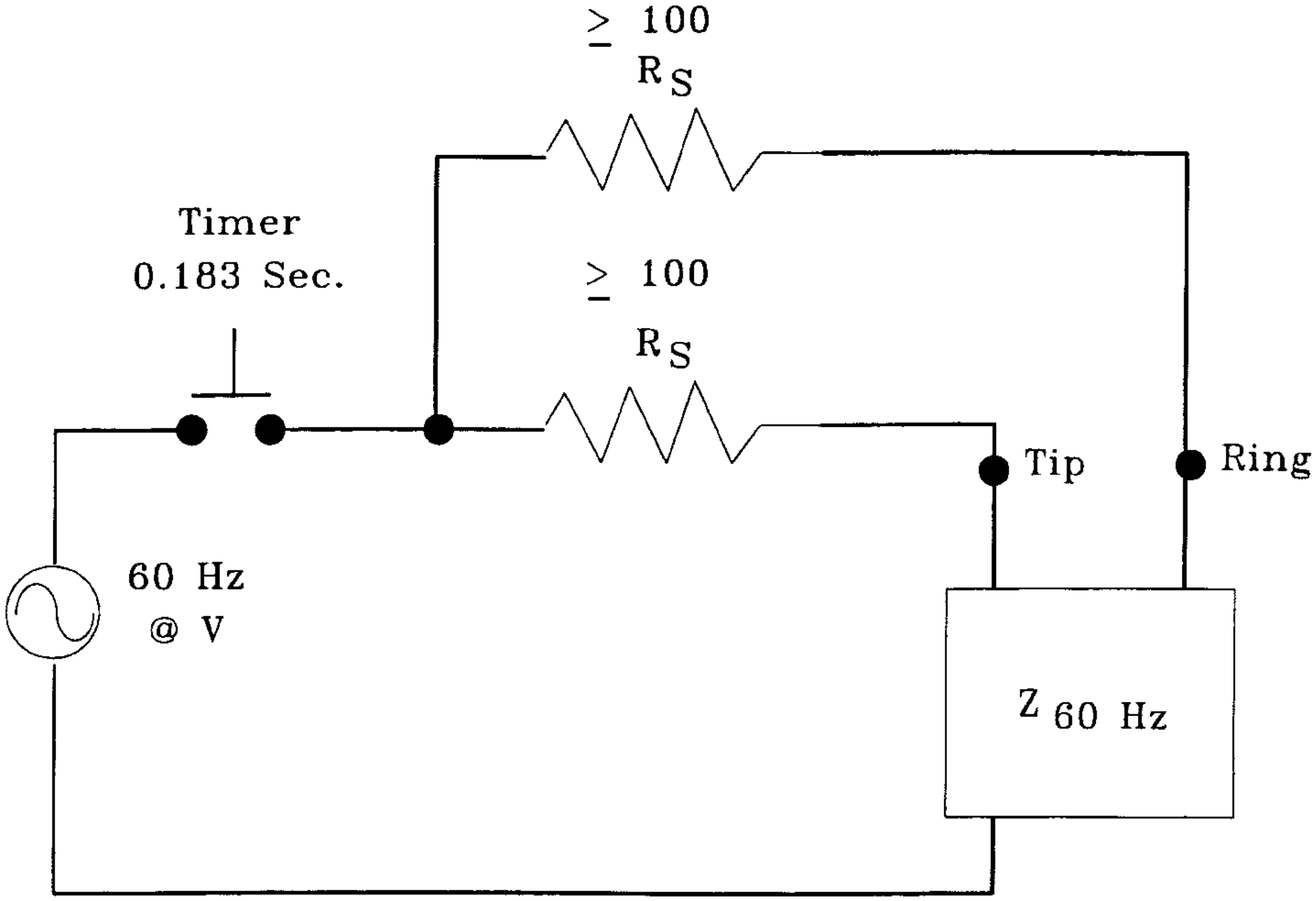
≥ 100
R S
Timer
0.183 Sec.
≥ 100
R S
Tip
Ring
60 Hz
@ V
Z 60 Hz