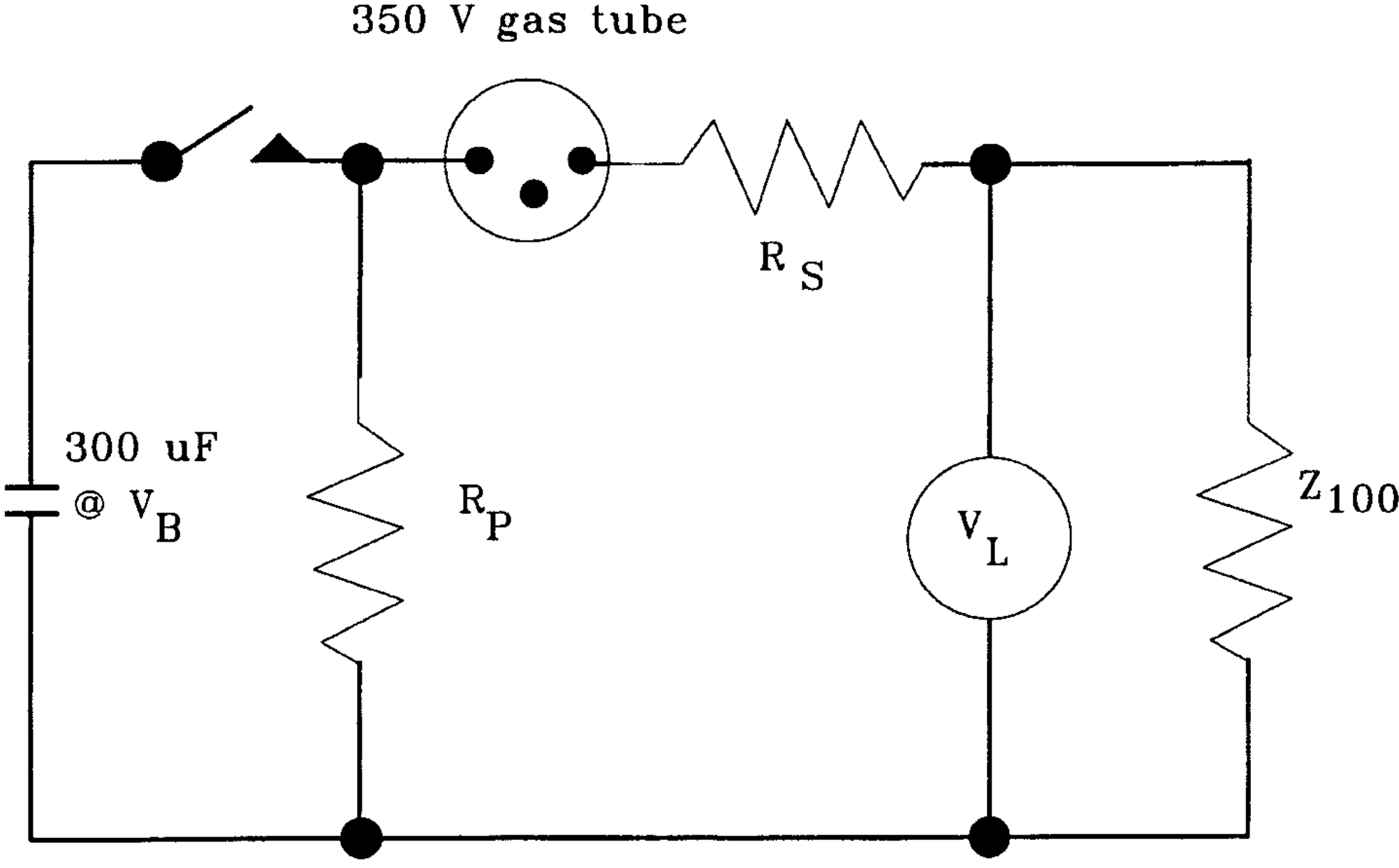
350 V gas tube
R S
300 uF
@ V B
R P
V L
Z 100