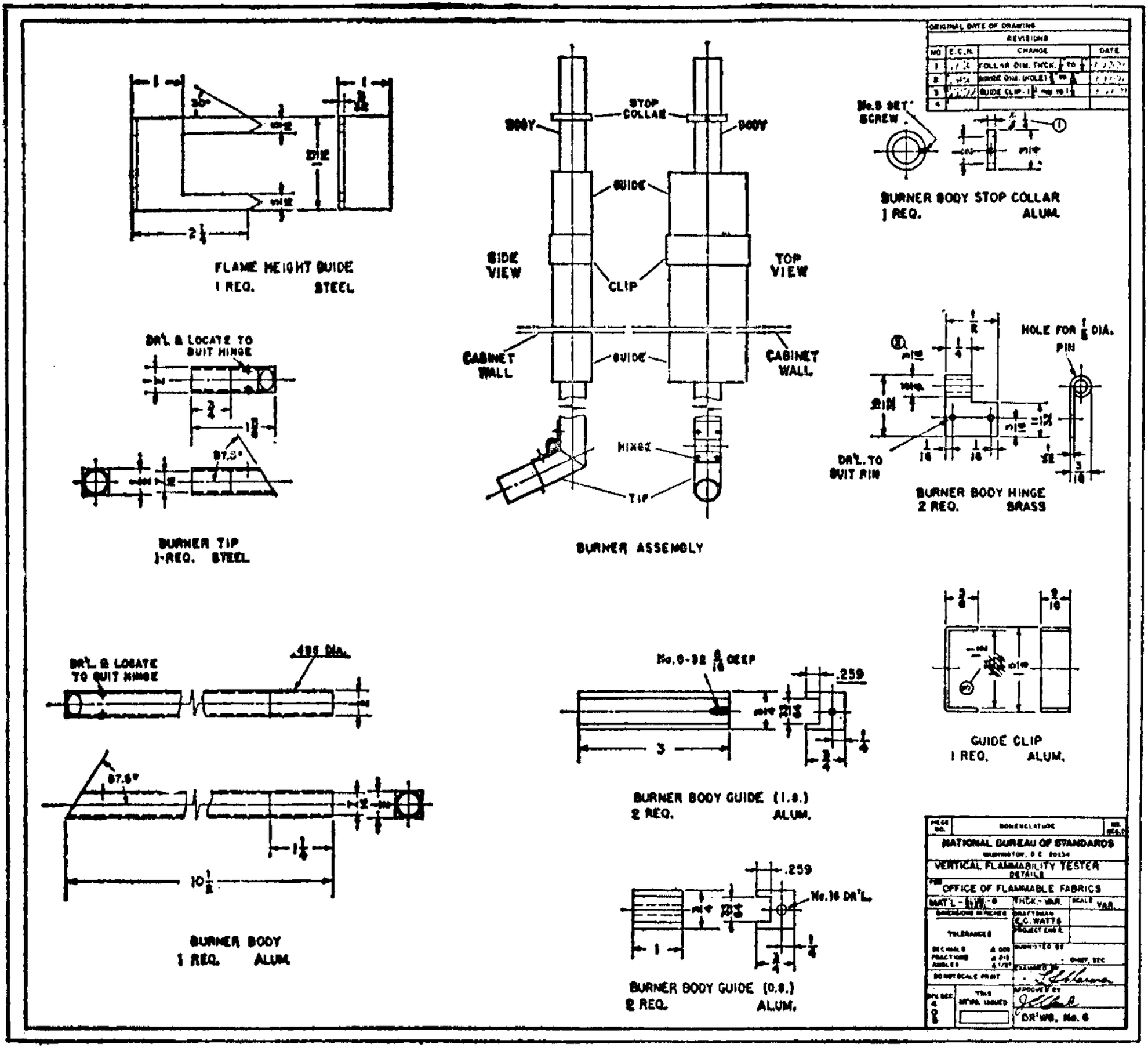
ORIGINAL DATE OF DRAWING
REVISIONS
NO
E.C.H.
CHANGE
DATE
COLLAR DIM. THCK.
HINGE DIM. (HOLE)
GUIDE CLIP
FLAME HEIGHT GUIDE
1 REQ. STEEL
STOP COLLAR
BODY
BODY
GUIDE
SIDE VIEW
TOP VIEW
CLIP
CABINET WALL
GUIDE
CABINET WALL
HINGE
TIP
BURNER ASSEMBLY
No.5 SET SCREW
BURNER BODY STOP COLLAR
1 REQ. ALUM.
DR'L. & LOCATE TO SUIT HINGE
87.5°
BURNER TIP
1-REQ. STEEL
HOLE FOR 1/8 DIA. PIN
DR'L. TO SUIT PIN
BURNER BODY HINGE
2 REQ. BRASS
DR'L. & LOCATE TO SUIT HINGE
.495 DIA.
87.5°
BURNER BODY
1 REQ. ALUM.
No.0-32 5/16 DEEP
.259
BURNER BODY GUIDE (I.S.)
2 REQ. ALUM.
GUIDE CLIP
1 REQ. ALUM.
.259
No.16 DR'L.
BURNER BODY GUIDE (O.S.)
2 REQ. ALUM.
NOMENCLATURE
NATIONAL BUREAU OF STANDARDS
WASHINGTON, D.C. 20234
VERTICAL FLAMMABILITY TESTER
DETAILS
OFFICE OF FLAMMABLE FABRICS
THCK.-VAR.
SCALE VAR.
DRAFTSMAN E.C. WATTS
TOLERANCES
DO NOT SCALE PRINT
DR'WG. No. 6