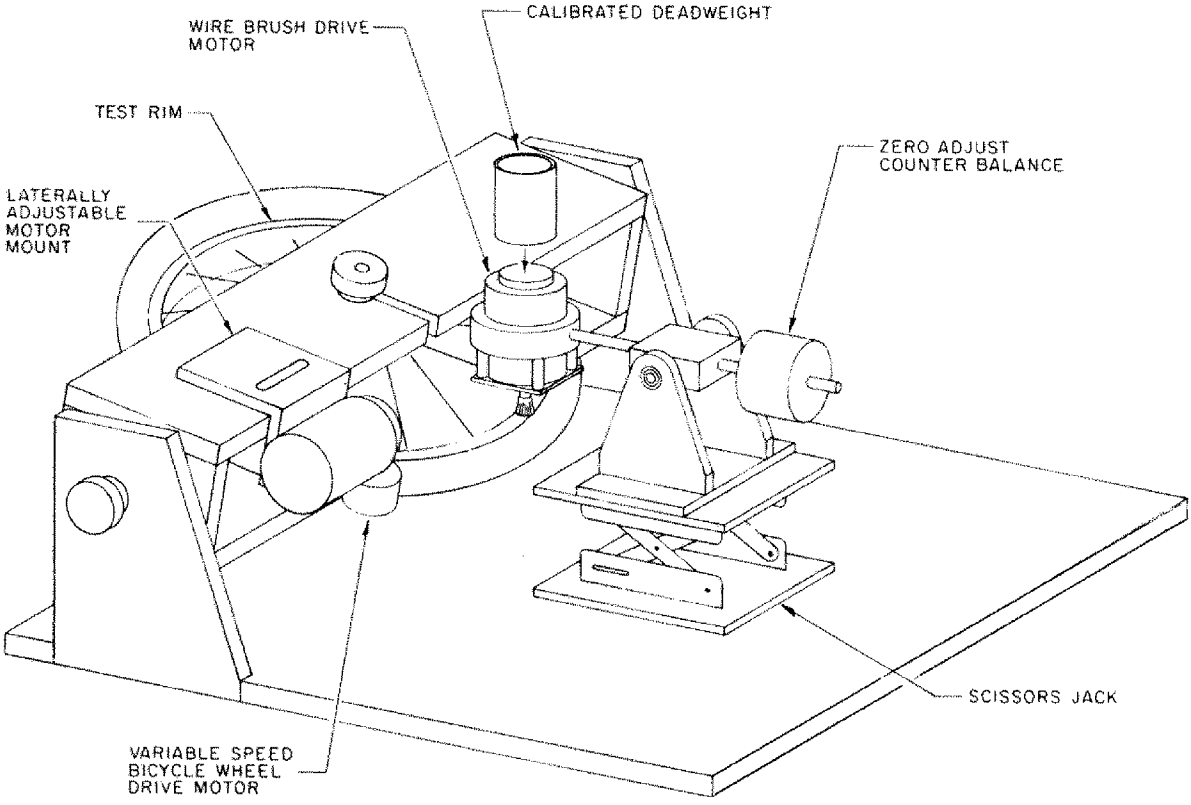

FIG 8–REFLECTORIZED BICYCLE WHEEL RIM ABRASION TEST DEVICE