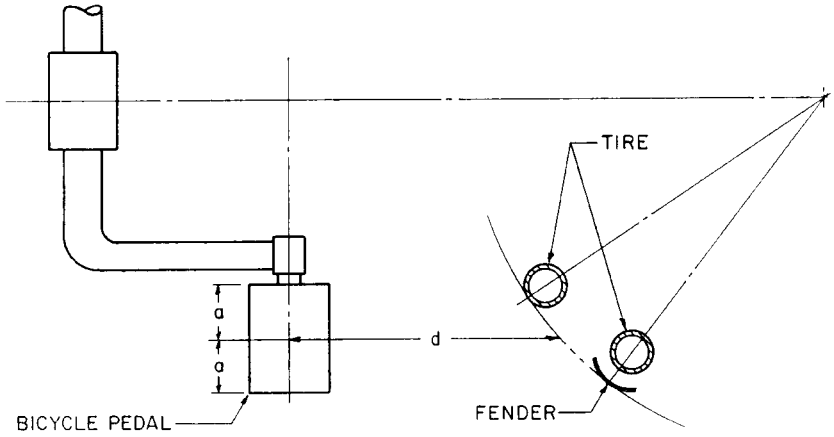

FIG 6-TOE CLEARANCE

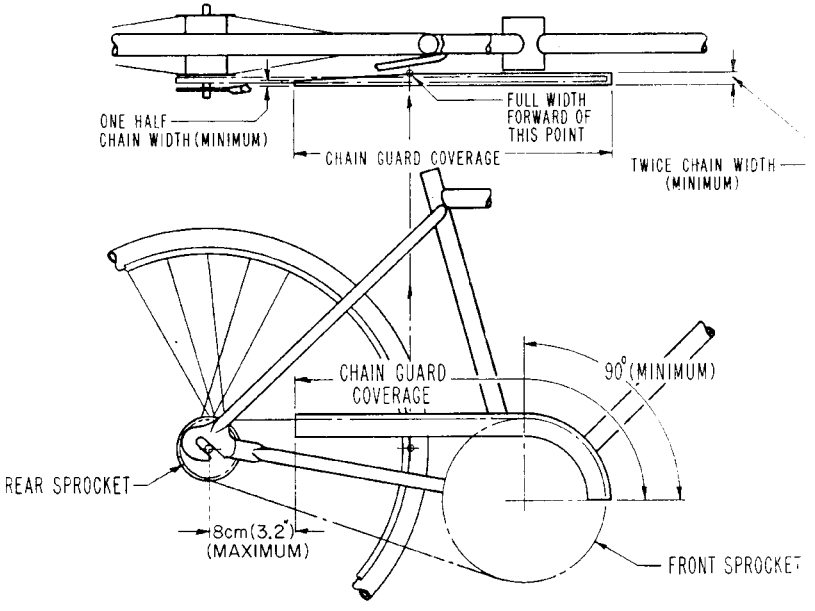

FIG 7-CHAIN GUARD REQUIREMENTS