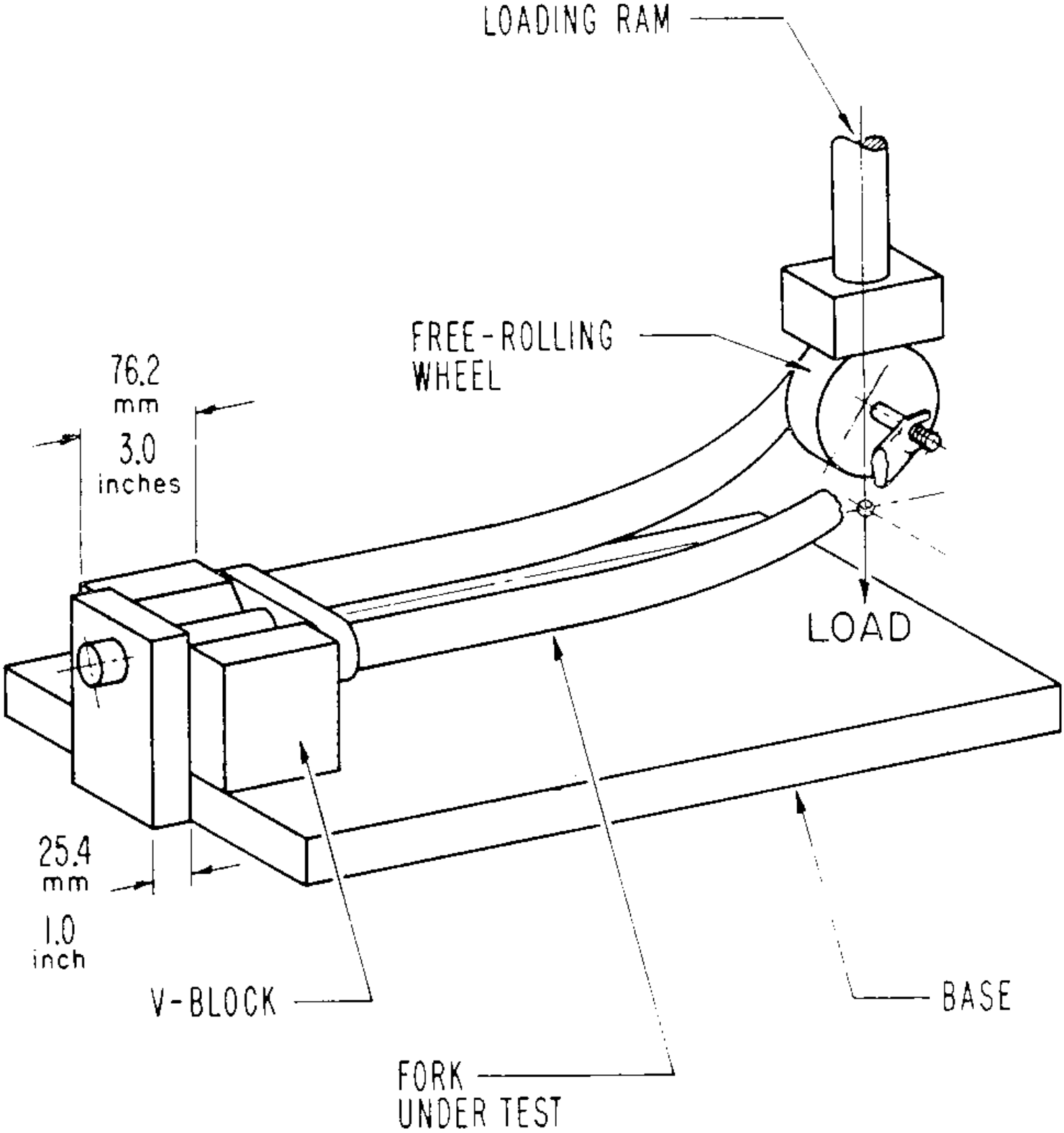

FIG 1-BICYCLE FRONT FORK CANTILEVER BENDING TEST RIG