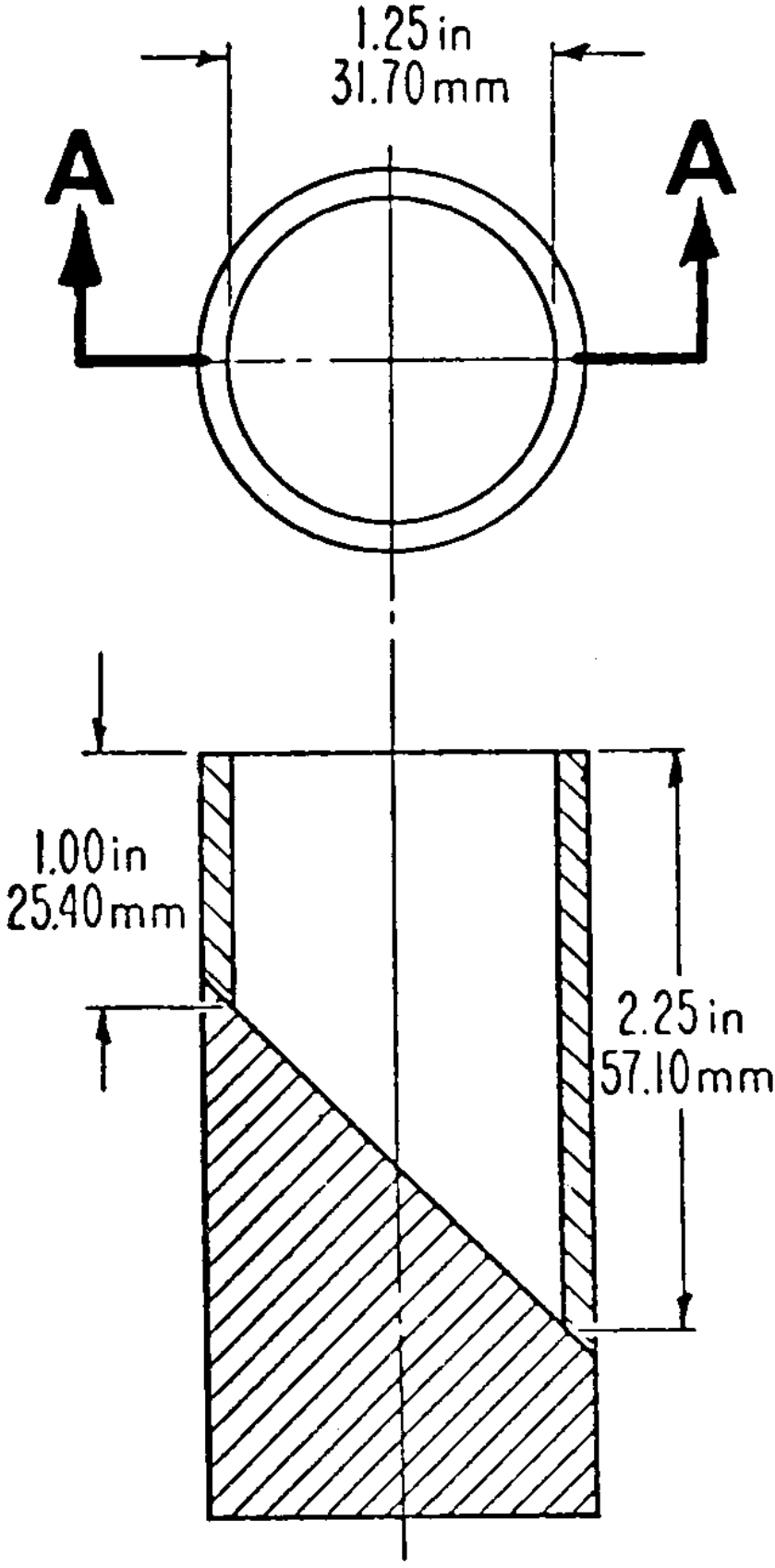

Section A-A

FIG 2-SMALL PARTS GAGE