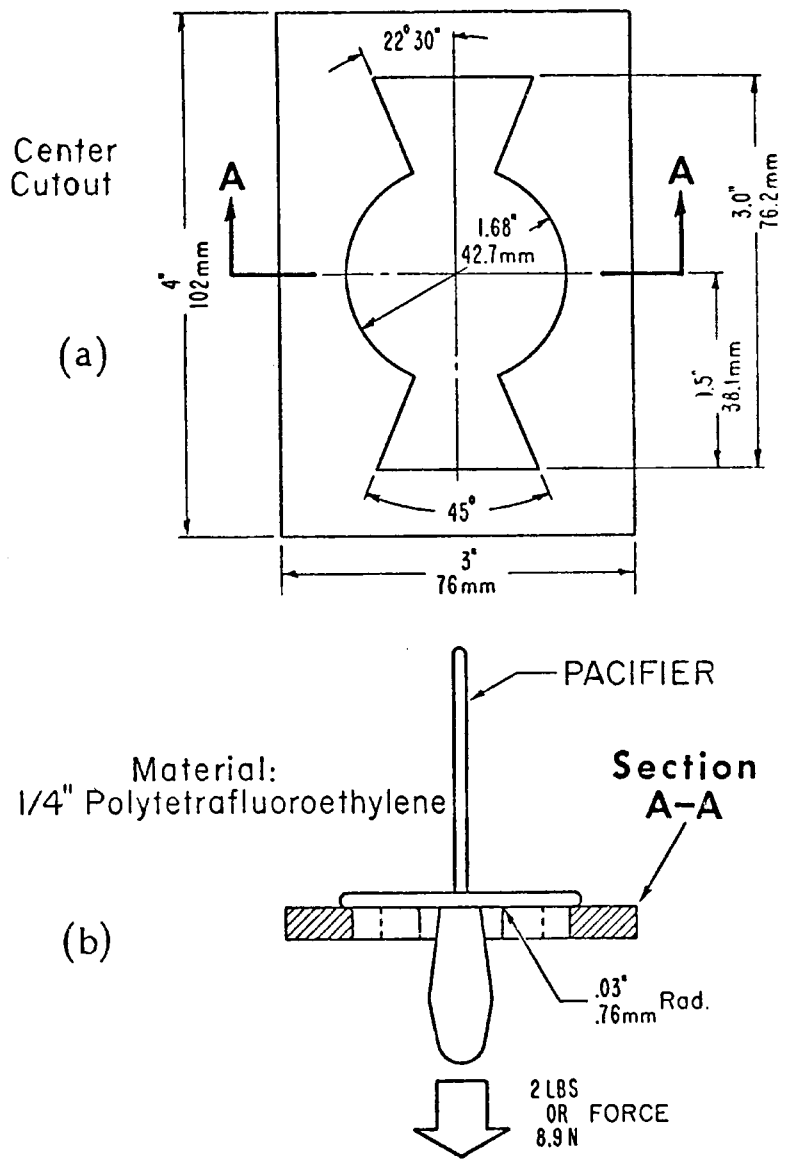

FIG 1 - PACIFIER TEST FIXTURE