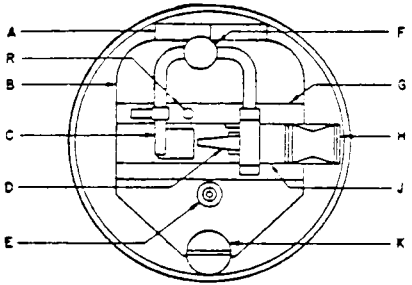

A - Hinge
B - Lid
C - Pilot flame jet
D - Test flame jet
E - Filling orifice
F - Test flame gas control screw
G - Shutter guide
H - Shutter knob
J - Shutter
K - Lid lock
L - Lid sealing O-ring
M - Thermometer
N - Sample cup
P - Thermometer pocket
R - Test flame guage

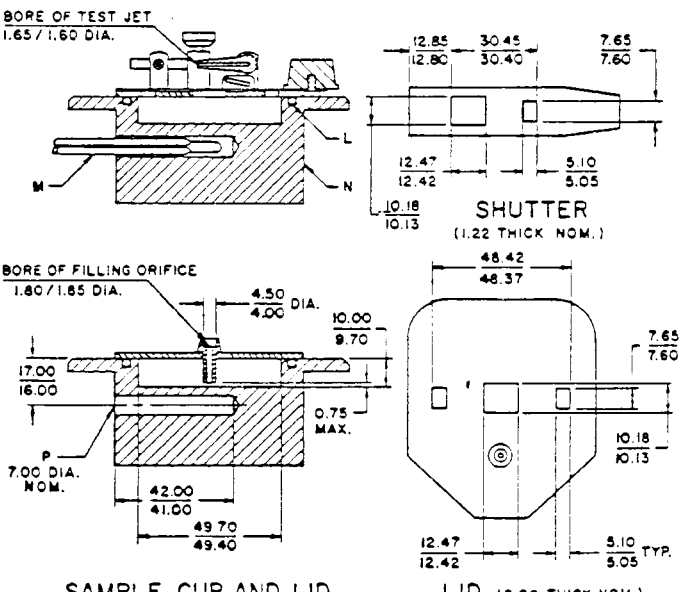

(All dimensions are in millimeters)

FIGURE 1 - Closed-cup tester