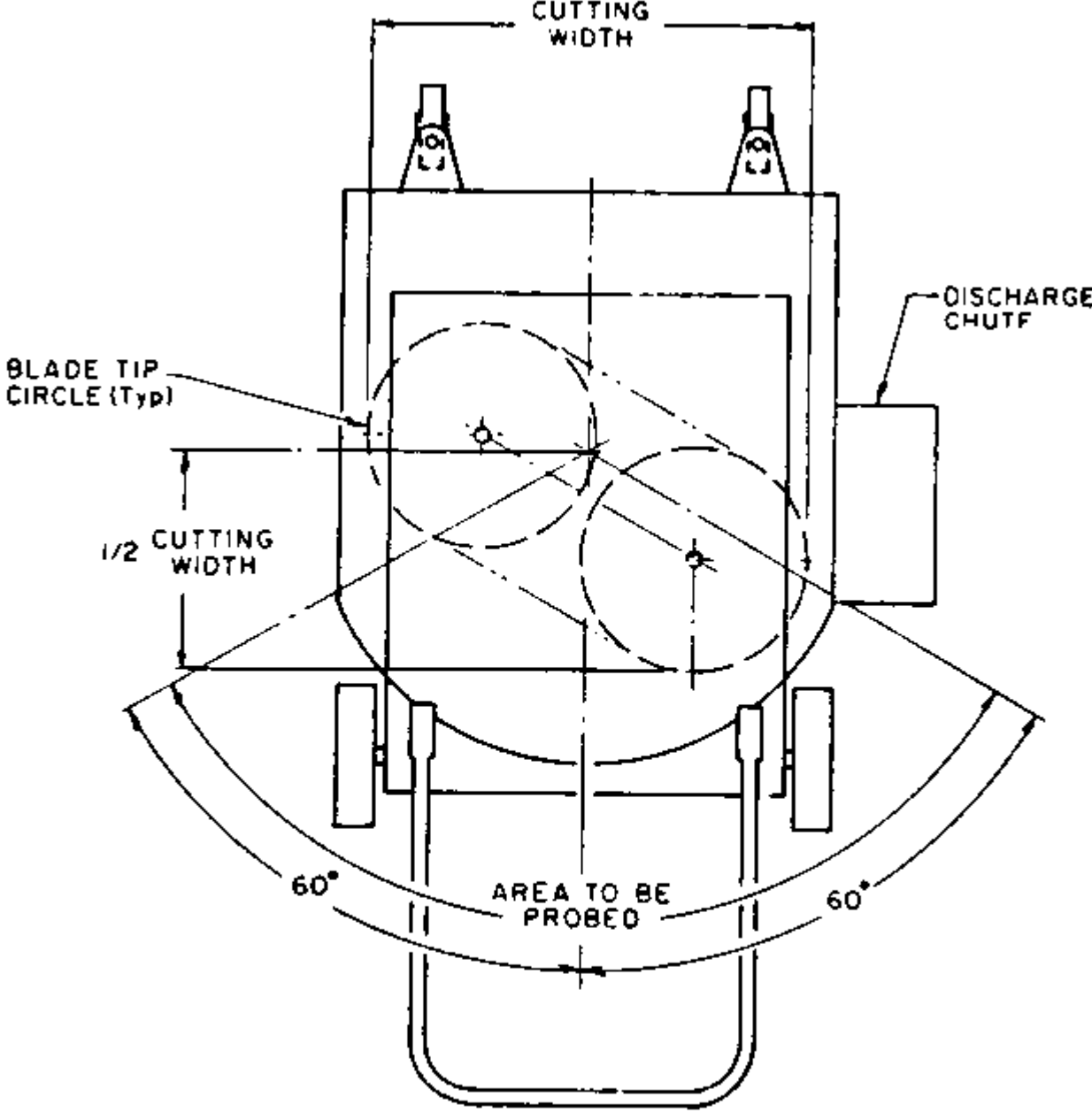


**FIGURE 4 - AREA TO BE PROBED MULTI-BLADE MOWERS**