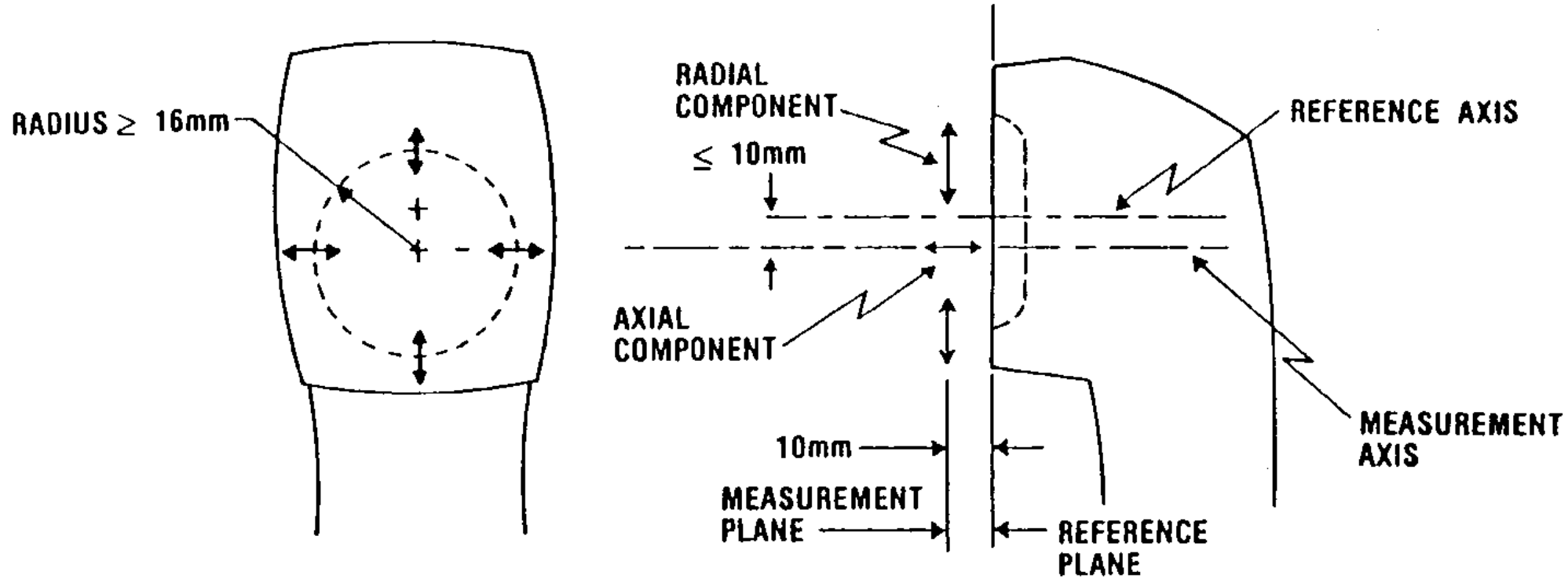


FIG 1 REFERENCE AND MEASUREMENT PLANES AND AXES