Figure 1b

National Response System Concepts: Planning

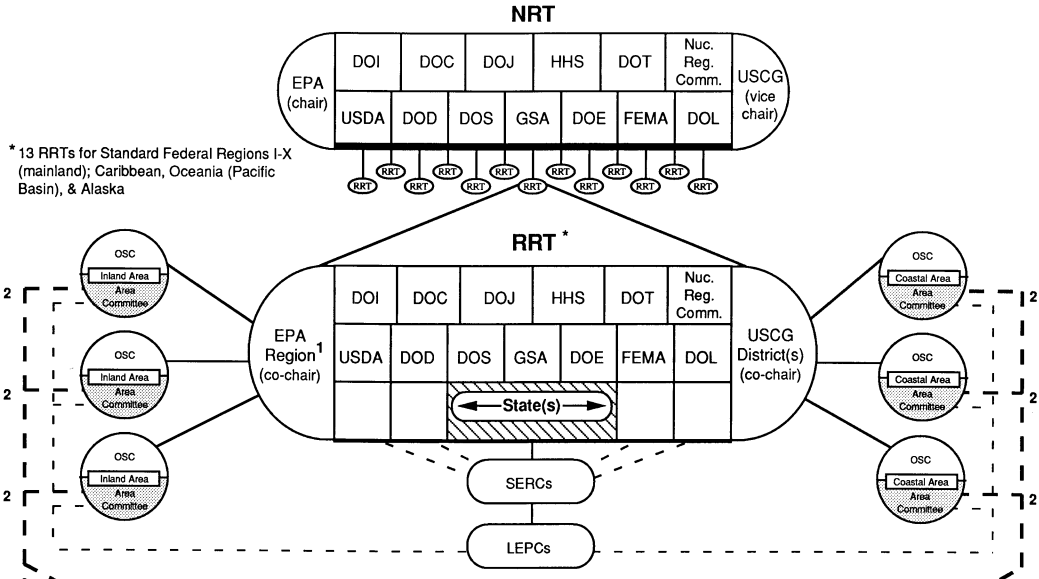

Sources of Input and Guidance to Area Committees	
Government (sec. 300.145)	**Non-Government** (57 FR 15198)
Strike Teams	Facility and vessel owners/operators[2]
NPFC	Shipping company representatives
ERT	Cleanup contractors
RERT	Emergency planning and response officials
DRG	Marine pilot associations
DRAT	Members of academia
SSC	Environmental advocacy groups
PIAT	Response organizations/officers.
SUPSALV	Citizens

[1] RRT serves as the Area Committee for inland areas not covered by a separate Area Committee, unless a separate Area Committee is designated by the Regional Administrator (57 FR 15198).

[2] Federal laws (e.g., CWA Sec. 311(j)(5), Clean Air Act Sec. 112(r), OSHA (Process safety regulations) require facility owner/operators to prepare a response plan. Additional description is found in Section 300.211.