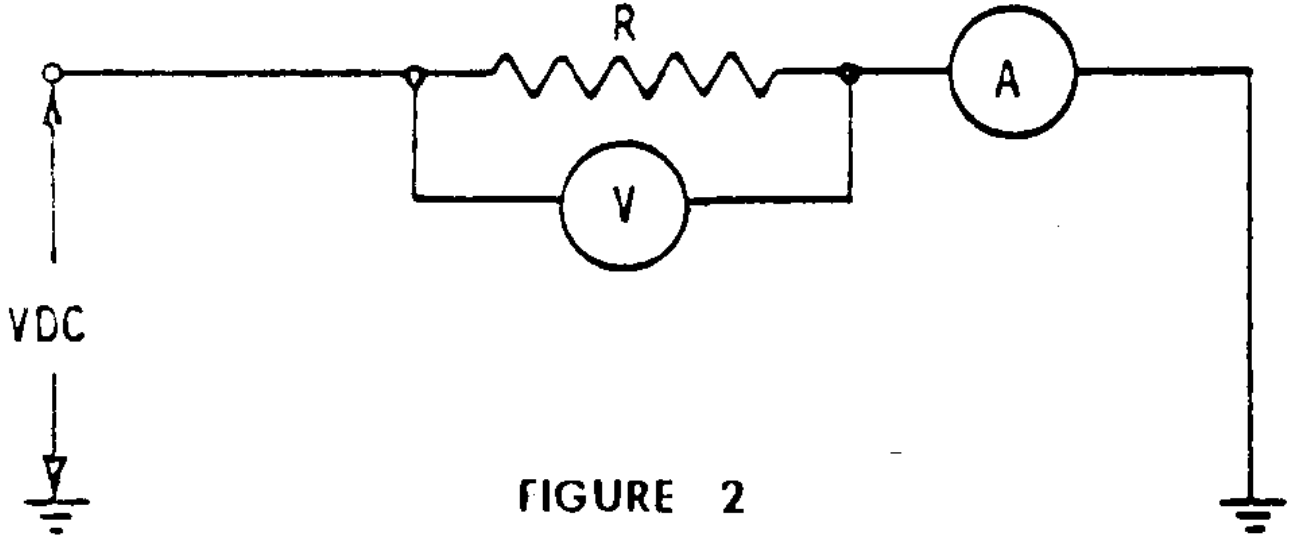

FIGURE 2

Current A to be maintained at 2.5 amps for duration of test.