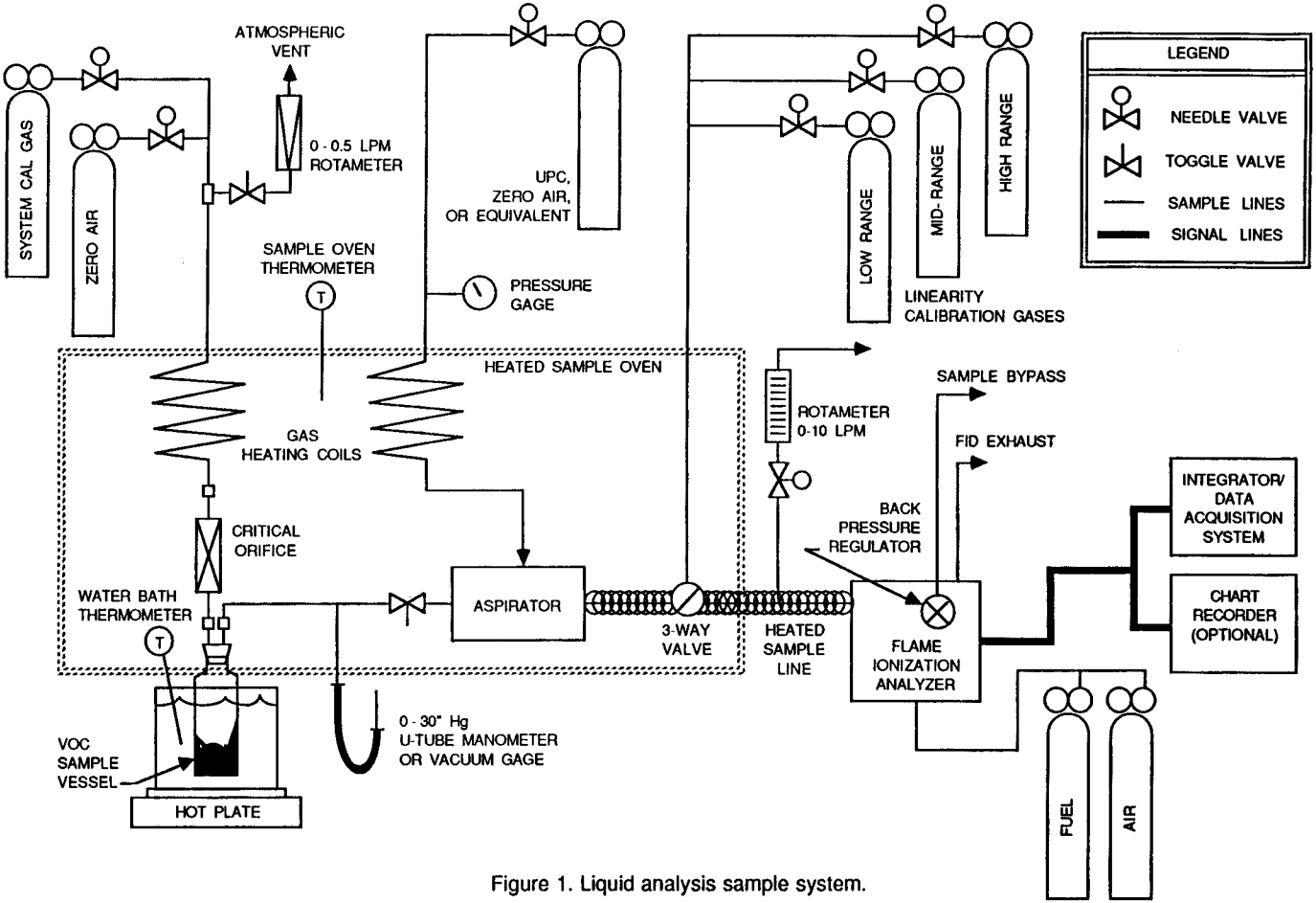

Figure 1. Liquid analysis sample system.