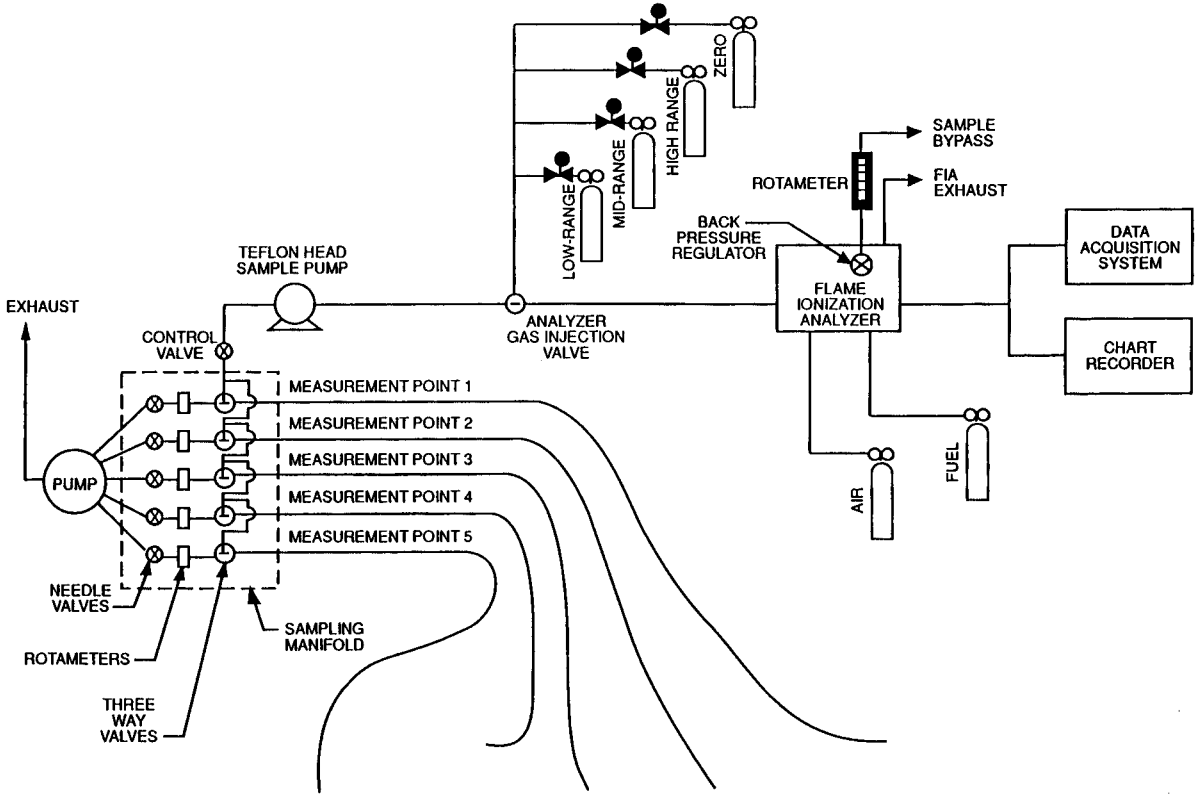

Figure 2. Background measurement system.