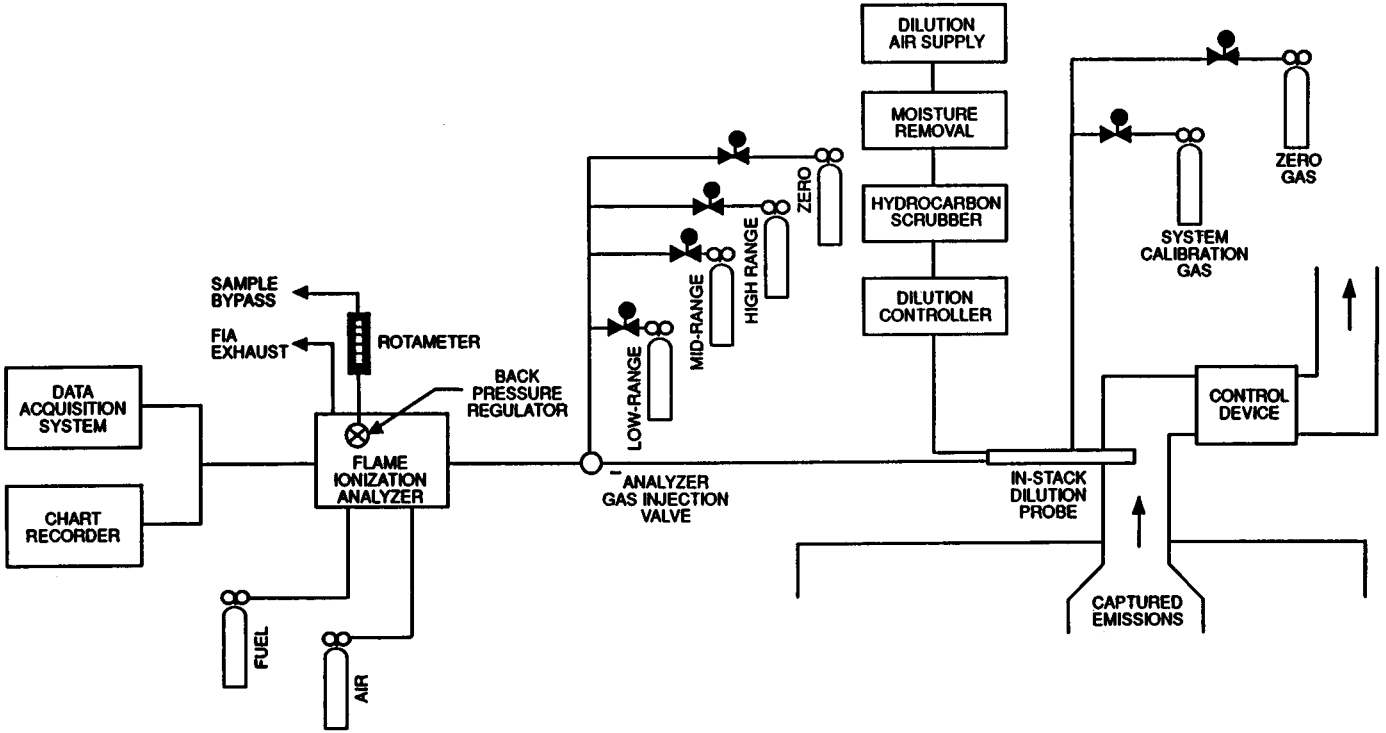

Figure 1. Captured emissions measurement system.