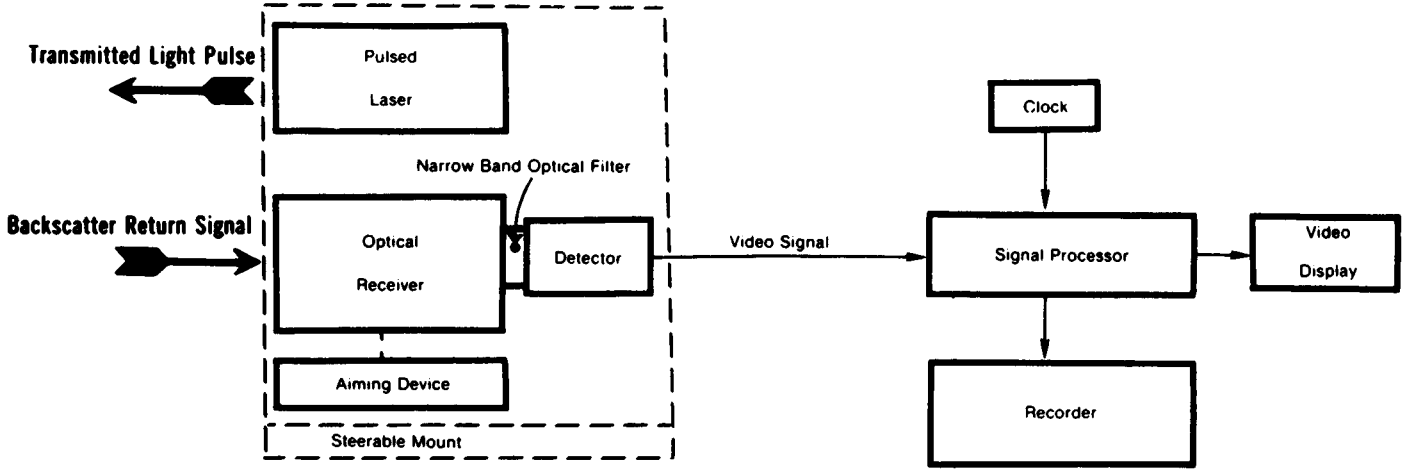

Figure AM1-VII. Functional Block Diagram of a Basic Lidar System