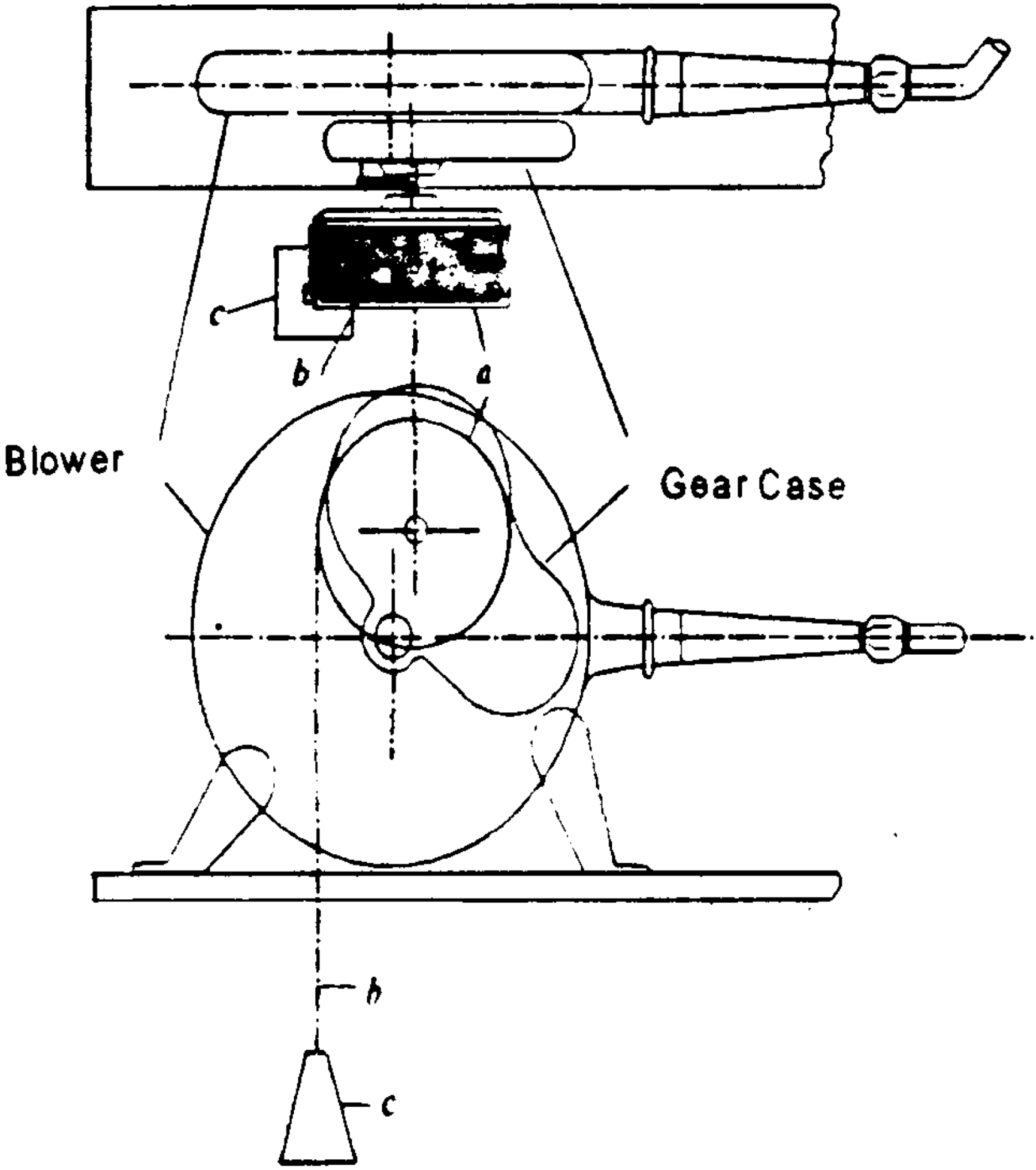
c
b
a
Blower
Gear Case
h
c