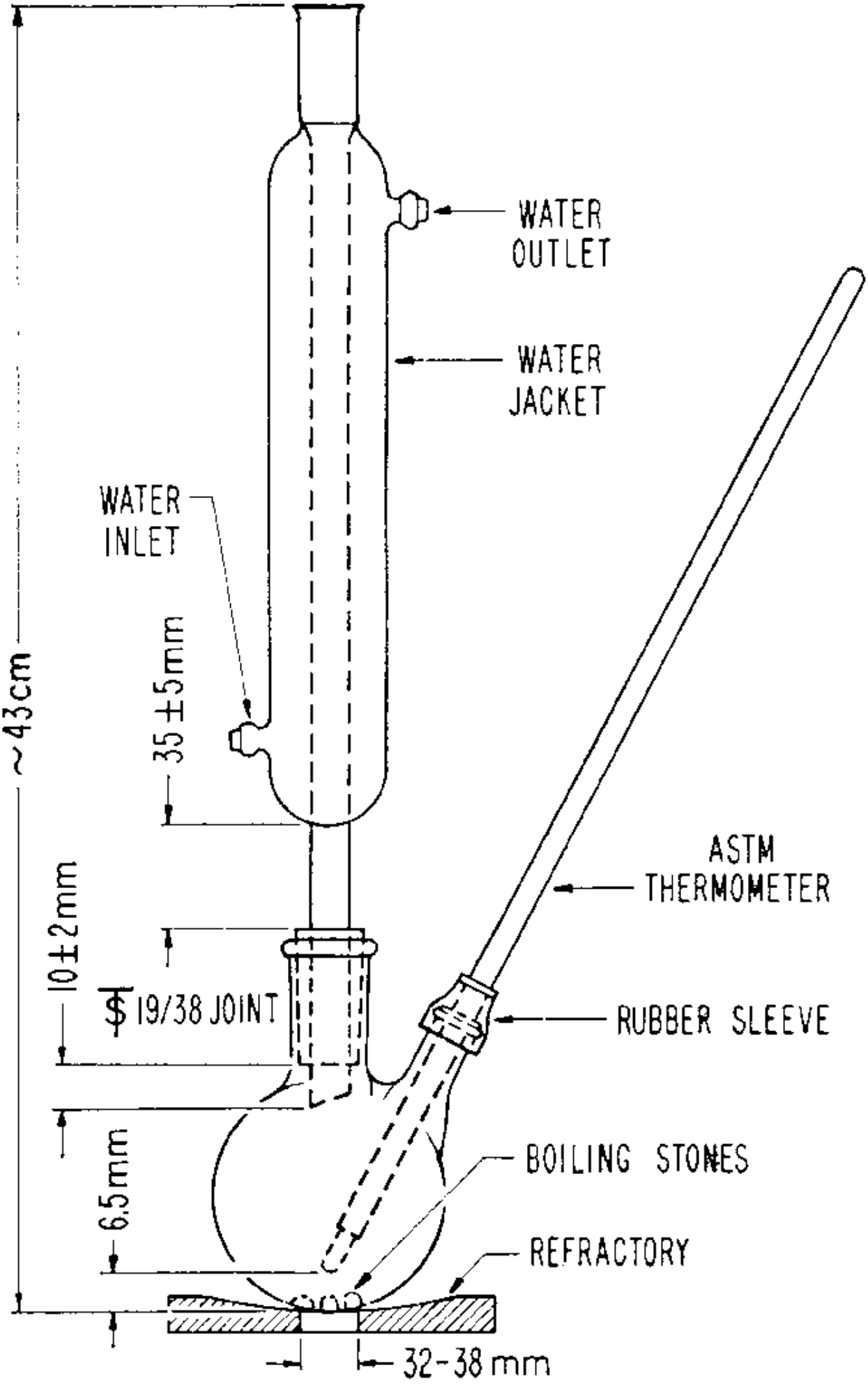
WATER OUTLET
WATER JACKET
WATER INLET
~43cm
35±5mm
ASTM THERMOMETER
10±2mm
19/38 JOINT
RUBBER SLEEVE
6.5mm
BOILING STONES
REFRACTORY
32-38 mm