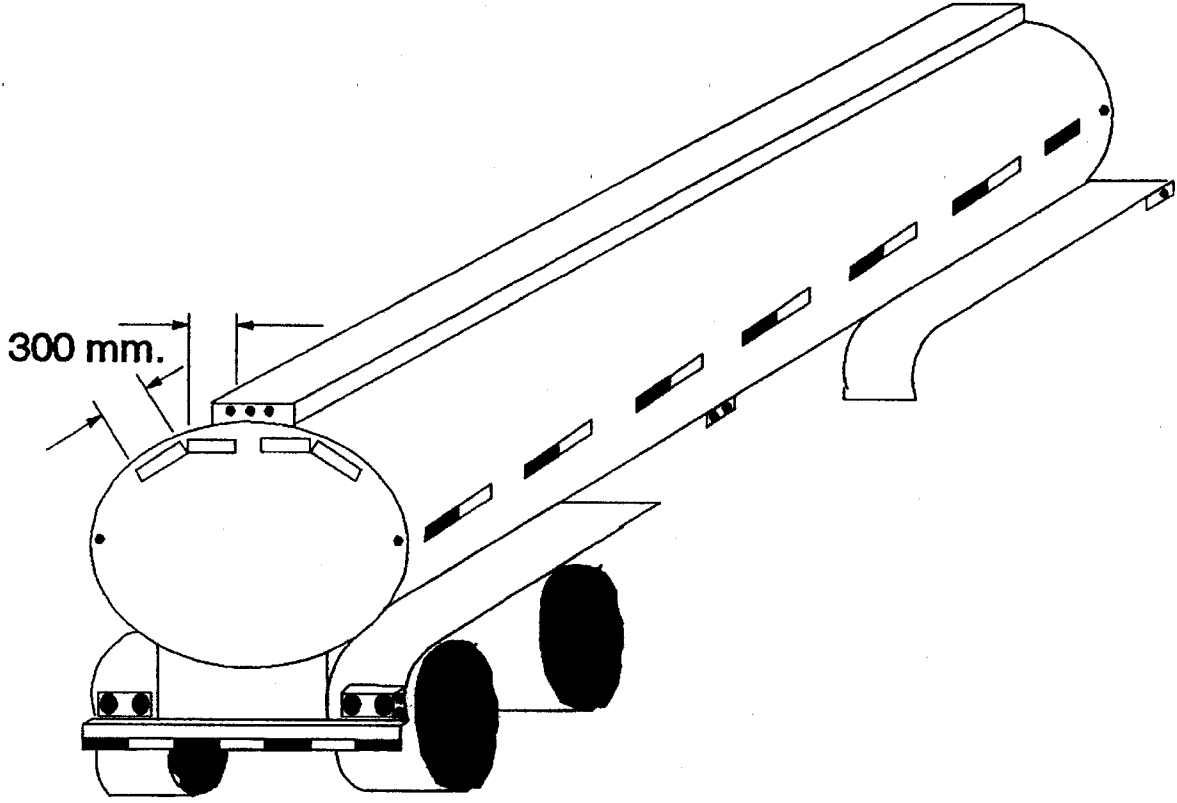

Figure 30-4

Trailer Conspicuity Treatment Example