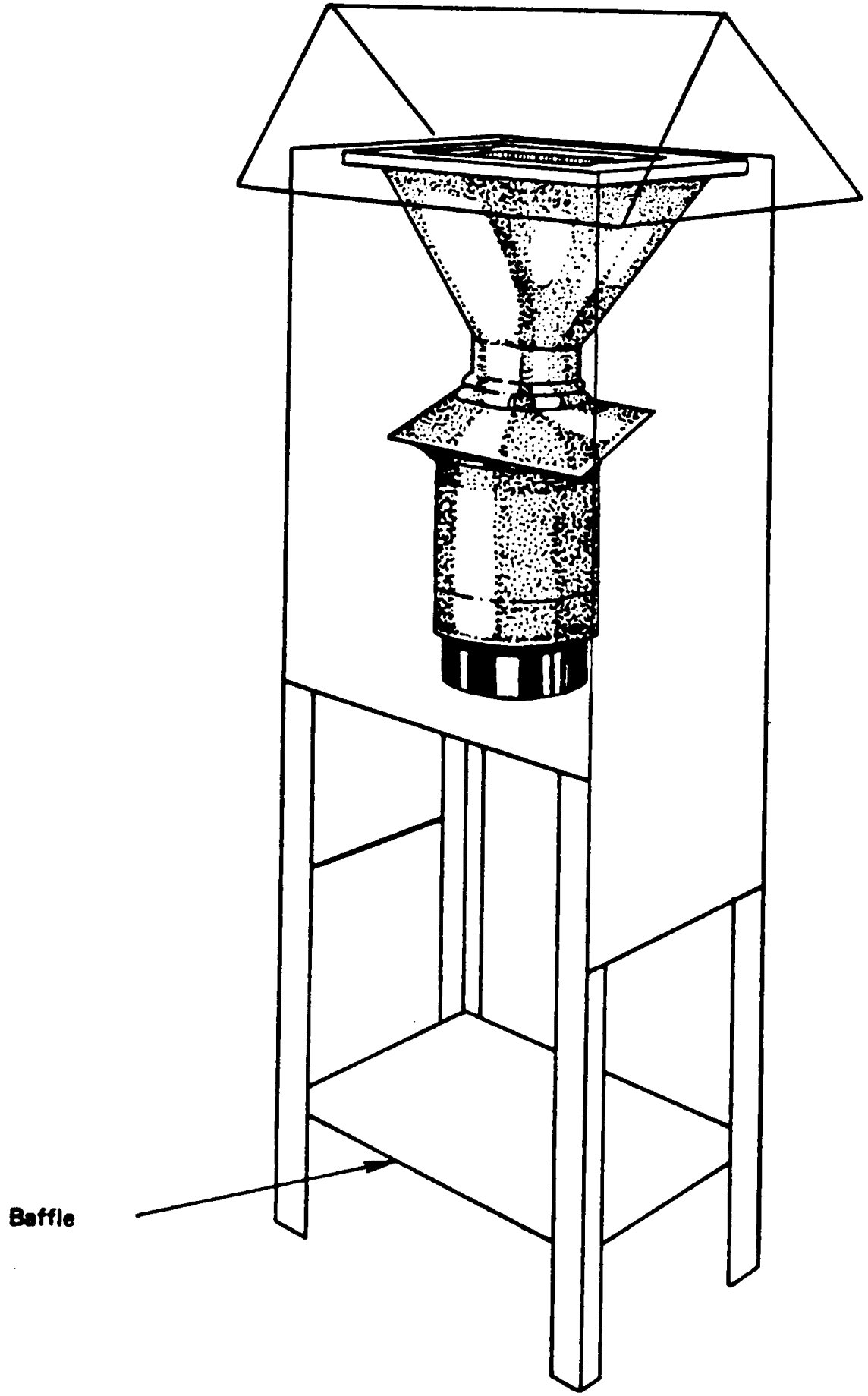

Figure 1. High-volume sampler in shelter.